CITY COUNCIL AGENDA

CITY COUNCIL CHAMBERS . 11465 WEST CIVIC CENTER DRIVE . AVONDALE, AZ 85323

WORK SESSION
December 18, 2006
6:30 PM

CALL TO ORDER BY MAYOR ROGERS

1 ROLL CALL BY THE CITY CLERK

2 ORDINANCE1236-1206 AMENDING CHAPTER 14 MASSAGE THERAPISTS AND ESTABLISHMENTS

Staff will update the Council on proposed changes to Chapter 14 Massage Therapists and Establishments, Avondale City Code. For information only.

3 ADJOURNMENT

Respectfully submitted,

Linda M Farris

Linda Farris, CMC
City Clerk

Any individual with a qualified disability may request a reasonable accommodation by contacting the City Clerk at 623-478-3030 at least 48 hours prior to the council meeting.

CITY COUNCIL REPORT

SUBJECT:
Ordinance1236-1206 amending Chapter 14 Massage Therapists and Establishments

MEETING DATE:
December 18, 2006

TO: Mayor and Council

FROM: Linda Farris

THROUGH: Charlie McClendon, City Manager

PURPOSE:

Staff will update the Council on proposed changes to Chapter 14 Massage Therapists and Establishments, Avondale City Code. For information only.

BACKGROUND:

Chapter 14 of the City of Avondale Municipal Code was originally adopted in 1978. State law and industry standards have made it necessary to amend this chapter of the City Code.

In July 2005, the State of Arizona took over licensing massage therapists in this state. As such that provision of the City Code is no longer necessary. Industry standards have changed over the past 28 years making some sections of the City Code out dated. Staff has had several requests to remove the requirement for a shower from the code. This requirement was part of the original ordinance used years ago to ensure that massage establishments were legitimate licensed businesses. Now the industry is licensed and monitored by the State. Staff has surveyed several other cities and have not found a requirement for a shower.

Staff is proposing to amend the City Code by deleting the sections regarding licensing of massage therapists, updating definitions, and updating the Massage Establishment License; Special Requirements to change the requirement of a shower or tub to a wash basin with hot and cold running water.

RECOMENDATION:

None. For information only.

ATTACHMENTS:

Click to download

- Ordinance 1236-1206
- Massage Ordinance - Mark-up copy

ORDINANCE NO. 1236-1206

AN ORDINANCE OF THE COUNCIL OF THE CITY OF AVONDALE, ARIZONA, AMENDING THE AVONDALE CITY CODE, CHAPTER 14, MASSAGE THERAPISTS AND ESTABLISHMENTS, RELATING TO MASSAGE ESTABLISHMENTS.

BE IT ORDAINED BY THE COUNCIL OF THE CITY OF AVONDALE as follows:

SECTION 1. That the Avondale City Code, Chapter 14, Massage Therapists and Establishments, is hereby deleted in its entirety and replaced with the following:

CHAPTER 14 MASSAGE ESTABLISHMENTS

Article I – In General

Sections

14-1 Definitions.
14-2 Enforcement officer.
14-3 Exemptions.

14-1 Definitions.

The following words, terms and phrases, when used in this Chapter, shall have the meanings ascribed to them in this Section, except where the context clearly indicates a different meaning:

"Massage establishment" means any place of business or establishment wherein any massage or touching techniques are administered, practiced or used, or from which is dispatched a person for the purpose of administering, practicing or using any of massage or touching techniques.

"Massage or touching techniques" means therapeutic manipulation of the human body through the skillful application of varied movements of the hands and fingers of the therapist upon the muscles and other soft tissues of the external parts of the body including effleurage, petrissage, tapotment, rubbing, friction, vibration, rolling, oil rubs, salt glows, alcohol rubs, colon irrigation, and the rotation, circumduction, flexion and extension of the extremities.

Massage techniques also include hydrotherapy, consisting of tub, shower or cabinet baths, hot and cold packs, and adjunctive therapies, including the use of electrical devises such as

heat lamps and vibrators which have been approved by the American Massage Therapy Association, and methodical pressure. All massage techniques are to be applied to the external parts of the body only.

14-2 Enforcement officer.

It shall be the duty and responsibility of the city clerk to administer the provisions of this Chapter, and pursuant to this duty she shall issue, renew, deny, suspend or revoke massage establishment licenses as required by this Chapter.

14-3 Exemptions.

(a) The provisions of this Chapter shall not apply to:

(1) Persons authorized by the laws of this state to practice medicine, osteopathy, chiropractic, podiatry, naturopathy or acupuncture.

(2) Registered nurses, licensed practical nurses or technicians, when acting under the supervision of a licensed physician, chiropractor or osteopath.

(3) Persons employed or acting as trainees for any bona fide amateur, semiprofessional or professional athlete or athletic team.

(4) Persons authorized by the laws of this state as barbers or cosmetologists, provided their activity is limited to the head, face or neck.

(5) Persons wholly employed in the sale of clothing, cosmetics, jewelry or sporting equipment insofar as these individuals must incidentally touch a customer to properly fit or sell the product, at its standard market price.

(b) Any exemption granted herein is effective only insofar as and to the extent that the bona fide practice of the business or profession of the person exempted overlaps into the field comprehended by this Article, and exemptions granted herein are solely for those activities which are performed in the course of the bona fide practice of the business or profession of the person exempted.

14-4--14-19 Reserved.

Article II - Licenses for Therapists and Establishments

Sections

14-20 Required.
14-21 Application and fee.
14-22 Investigation.
14-23 Special requirements for massage establishment licenses.
14-24 Display.
14-25 Renewal.
14-26 Sale, transfer or expansion.
14-27 Suspension or revocation generally.
14-28 Grounds for revocation, suspension or denial of renewal.
14-29 Effect of denial or termination.

14-20 Required.

(a) It shall be unlawful for any person to practice or administer any massage or touching techniques whether for a fee or a gratuity, without first obtaining and maintaining in effect a massage therapist license as required by Title 32, Chapter 42 of the Arizona Revised Statutes.

(b) It shall be unlawful for any person to conduct or operate a massage establishment without first obtaining and maintaining in effect a massage establishment license issued pursuant to this Article.

(c) It shall be unlawful for any person to employ as a massage therapist any person who does not hold a current and unsuspended massage therapist license required by Title 32, Chapter 42 of the Arizona Revised Statutes.

(d) It shall be unlawful for any person licensed as provided in this Article to operate under any name or conduct business under any designation not specified in such license.

(e) Persons and massage establishments shall comply with all other applicable ordinances and laws, including the City zoning ordinance.

14-21 Application and fee.

(a) Any person desiring to obtain a massage therapist or massage establishment license shall make application to the city clerk, who shall refer each such application to the chief of police for appropriate investigation.

(b) The application shall be accompanied by a non-refundable fee, in an amount determined by the City Council as part of the City's annual budget or by separate resolution, when the application is for a massage establishment license.

(c) An applicant for a massage establishment license shall submit the following:

(1) The full legal name and current residence address of the applicant.

(2) Any other names by which the applicant has been known during the previous five (5) years.

(3) The address at which applicant desires to do business.

(4) The two (2) residence addresses immediately prior to the present address of applicant, and the dates of residence at each.

(5) Written proof that the applicant is over the age of eighteen (18) years.

(6) The applicant's height, weight and hair and eye color.

(7) The business, occupation or employment history of the applicant during the previous five (5) years.

(8) The business license history of the applicant; whether the applicant is previously operating in this or another city or state under license, has had such license revoked or suspended, the reason therefor, and the business activity or occupation subsequent to such suspension or revocation.

(9) All felony and misdemeanor convictions, excluding those for traffic offenses, and the grounds of such convictions.

(10) The applicant's complete fingerprints, recorded by the police department.

(11) Such other identification and information as the City may require in order to discover the truth of the matters above required to be set forth in the application.

(d) This Section shall not apply to renewal licenses.

(e) A list of services to be offered by the massage establishment.

14-22 Investigation.

Any applicant for a license required by this Article shall personally appear at the city clerk's office and shall present the application containing the information required by Section 14-21 above. The police department shall have a reasonable time in which to investigate the application and the background of the applicant. Based on such investigation, the police department shall recommend to the city clerk approval or denial of the license. In addition, the building safety department and the fire department shall inspect any premises proposed as the

site of a massage establishment, and shall make separate reports to the city clerk concerning compliance with the provisions of Section 14-23 below.

14-23 Special requirements for massage establishment licenses.

(a) No massage establishment license shall be issued or renewed unless inspection by the building safety department and the fire department indicates the site of the establishment complies with each of the following minimum requirements:

(1) A readable sign shall be posted at the main entrance identifying the establishment as a massage establishment.

(2) Minimum lighting shall be provided in accordance with the International Building Code, including all amendments thereto, as adopted by the City, and in addition, at least one artificial light of not less than sixty (60) watts shall be provided in each room or enclosure where services are performed on patrons, and shall be in use when such services are being performed.

(3) Minimum ventilation shall be provided in accordance with the International Building Code, including all amendments thereto, as adopted by the City.

(4) Adequate equipment shall be provided for disinfecting and sterilizing instruments used in administering or practicing any massage or touching techniques.

(5) Hot and cold running water shall be provided at all times.

(6) Closed cabinets shall be provided and used, for the storage of clean linens.

(7) Adequate bathing, dressing, locker, and toilet facilities shall be provided for patrons. One dressing room containing a separate locker for each patron to be served, which locker shall be capable of being locked, and a minimum of one toilet and one wash basin shall be provided by every massage establishment; provided, however, that if male and female patrons are to be served simultaneously at said establishment, a separate massage room or rooms, separate dressing facilities and separate toilet facilities shall be provided for male and female patrons.

(8) All walls, ceilings, floors, pools, showers, bath tubs, steam rooms, and all other physical facilities for the establishment must be in good repair and maintained in a clean and sanitary condition. Wet and dry heat rooms, steam or vapor rooms, or steam or vapor cabinets, shower compartments, and toilet rooms shall be thoroughly cleaned each day the business is in operation. Bathtubs shall be thoroughly cleaned after each use.

(9) Clean and sanitary towels shall be provided for each patron of the establishment. The headrest of each table shall be provided with a clean and sanitary towel, paper towel or sheet for each patron.

(10) A minimum of one separate wash basin shall be provided in each massage establishment for the use of employees of any such establishment, which basin shall provide soap or detergent and hot and cold running water at all times and shall be located within or as close as practical to the area devoted to the performing of massage services. In addition, there shall be provided at each wash basin, sanitary towels placed in permanently installed dispensers.

(11) Applicable provisions of the fire code adopted by the City.

(b) No massage establishment license shall be issued or renewed if the applicant has been convicted within the last five (5) years of any felony or other offense involving moral turpitude, if the applicant is addicted to dangerous or narcotic drugs or makes excessive use of alcohol, or if the application was deliberately falsified.

14-24 Display.

Every person to whom a license shall have been granted pursuant to this Chapter shall display the license in a conspicuous place upon the business premises.

14-25 Renewal.

Annually, on or before the first day of January of each year, every licensed massage establishment shall pay to the City a renewal fee in the amount determined by the City Council, either as part of the City's annual budget or by separate resolution.

14-26 Sale, transfer or expansion.

(a) Upon the sale or transfer of any interest in a massage establishment, the license therefor shall be null and void. A new application shall be made by any person desiring to own or operate the establishment. The provisions of Sections 14-22 and 14-23 above shall apply to any person, association, firm or corporation applying for a massage establishment license for premises previously used as such establishment.

(b) Any such sale or transfer of any interest in an existing massage establishment, or any application for enlargement or expansion of the building or other place of business of a massage establishment shall require inspection and compliance with Section 14-23 above.

14-27 Suspension or revocation generally.

To suspend or revoke a license issued pursuant to this Article, the city clerk or his agent shall deliver or mail by certified mail to his business address as shown on the application or otherwise more recently of record, a written notice that the license is suspended or revoked. The cause for such suspension or revocation shall be set forth in the notice. A suspended or revoked license shall be surrendered to the city clerk on demand. Revocation or suspension of a license shall not be a defense against prosecution.

14-28 Grounds for revocation, suspension or denial of renewal.

The license of a massage establishment may be revoked, suspended or denied renewal upon any one or more of the following grounds:

(a) The licensee is guilty of fraud in conducting the business of a massage establishment, or of fraud or deceit in obtaining a license to conduct such business.

(b) The licensee has been convicted in a court of competent jurisdiction of a felony or of any offense involving prostitution, indecent exposure or pornography.

(c) The licensee is addicted to the habitual use of intoxicating liquors, narcotics or stimulants to such an extent as to incapacitate him or her for the performance of his professional duties.

(d) The licensee is guilty of untrue, fraudulent, misleading or deceptive advertising.

(e) The licensee is grossly ignorant or guilty of willful negligence in the business of a massage establishment.

(f) The licensee has violated any of the provisions of this Chapter, any other provision of the City Code or any other ordinance, rule or regulation of the City.

14-29 Effect of denial or termination.

No person shall apply for any massage establishment license within one year from the denial of any such license to such applicant or from the suspension, revocation or non-renewal of any such license, unless the cause of such denial, suspension, revocation or non-renewal has been to the satisfaction of the city clerk removed within such time.

14-30--14-39 Reserved.

Article III - Operational Rules and Regulations

Sections

14-40 Operation on same premises as certain other businesses.
14-41 Hours of operation.
14-42 Prostitution, etc.
14-43 Change of location or employment.

14-40 Operation on same premises as certain other businesses.

It shall be unlawful for any person to conduct or operate a massage establishment on the same premises whereon is also conducted the business of a cocktail lounge, photography studio, model studio, art studio, telephone answering service, motion picture theater or bookstore.

14-41 Hours of operation.

It shall be unlawful for any person licensed as provided in this Chapter to remain open for business or provide services any time between the hours of 12:00 midnight and 6:00 a.m.

14-42 Prostitution, etc.

It shall be unlawful for any person to practice or administer any massage or touching technique for fee or gratuity:

(a) In a manner or under circumstances intended to arouse, appeal to or gratify sexual desires.

(b) To any other person whose private parts are not covered by opaque material.

(c) While wearing clothing patently deviating from the general standard of massage therapists apparel prevailing in the City.

(d) In any way touch the genitals of the individual receiving the treatment.

14-43 Change of location or employment.

A change of location of a massage establishment may be approved by the City, provided all ordinances and regulations of the City are complied with and a fee of ten dollars ($10.00) is paid to the City.

SECTION 2. That the Mayor, the City Manager, the City Clerk and the City Attorney are hereby authorized and directed to execute all documents and take all steps necessary to carry out the purpose and intent of this Ordinance.

SECTION 3. If any provision of this Ordinance is for any reason held by any court of competent jurisdiction to be unenforceable, such provision or portion thereof shall be deemed separate, distinct, and independent of all other provisions and such holding shall not affect the validity of the remaining portions of this Ordinance.

[SIGNATURES ON FOLLOWING PAGE]

PASSED AND ADOPTED by the Council of the City of Avondale, December 18, 2006.

_____
Marie Lopez-Rogers, Mayor

ATTEST:

_____
Linda M. Farris, City Clerk

APPROVED AS TO FORM:

_____
Andrew J. McGuire, City Attorney

Chapter 14 MASSAGE ~~THERAPISTS AND~~ ESTABLISHMENTS

Articles:

I In General
II Licenses for Therapists and Establishments
III Operational Rules and Regulations

Article I IN GENERAL

Sections:

14-1 Definitions.
14-2 Board of massage examiners.
14-3 Enforcement officer.
14-4 Applicability to existing businesses.
14-5 Exemptions.
14-6--14-20 Reserved.

14-1 Definitions.

The following words, terms and phrases, when used in this chapter, shall have the meanings ascribed to them in this section, except where the context clearly indicates a different meaning:

"Massage establishment" means any place of business or establishment wherein any massage or touching techniques are administered, practiced or used, or from which is dispatched a person for the purpose of administering, practicing or using any of massage or touching techniques.

"Massage or touching techniques" means therapeutic manipulation of the human body through the skillful application of varied movements of the hands and fingers of the therapist upon the muscles and other soft tissues of the external parts of the body including effleurage, petrissage, tapotment, rubbing, friction, vibration, rolling, oil rubs, salt glows, alcohol rubs, colon irrigation, and the rotation, circumduction, flexion and extension of the extremities.

Massage techniques also include hydrotherapy, consisting of tub, shower or cabinet baths, hot and cold packs, and adjunctive therapies, including the use of electrical devises such as heat lamps and vibrators which have been approved by the American Massage Therapy Association, and methodical pressure. All massage techniques are to be applied to the external parts of the body only.

~~"Massage therapist" means a person who has studied the underlying principles of anatomy and physiology, and who practices or administers any massage or touching techniques for a fee or income of any kind within the city.~~

~~"Recognized school of massage" means any institution of learning which has for its purpose the teaching of the theory, method and work of massage therapists, which has been approved by the state board of private technical and business schools and which requires a resident course of study of not less than six hundred (600) hours prior to issuance of a diploma or certificate of graduation, provided that schools operating outside of the state shall be considered recognized if a resident course of study of notless than six hundred (600) hours is required prior to issuance of a diploma or certificate of graduation and is equivalent to that required by the state board of private, technical and business colleges, and the school is licensed by the state or a subdivision~~

~~of the state within which it functions, if such licensing is required. (Ord. No. 256, § 1(10-6-1), 2-6-78)~~

14-2 Board of massage examiners.

(a) ~~A board of massage examiners is established. The board shall consist of three (3) practicing massage therapists of integrity and ability, who shall be licensed in a city within the state, and who shall have been engaged in such occupation in the state for a period of at least three (3) years. Such members shall be appointed by the city council for terms of up to three (3) years.~~

~~(b) The board of massage examiners shall have the following duties:~~

~~(1) To advise and make recommendations to the city council on all matters relating to the regulation and licensing of massage therapists and massage establishments within the city.~~

~~(2) To assist in developing written massage therapist tests on basic anatomy, physiology and hygiene.~~

~~(3) To examine all applications for massage therapist and massage establishment licenses, and upon such examination to provide to the city treasurer any information known to the board bearing on any applicant's suitability to be licensed. (Ord. No. 256, § 1(10-6-2), 2-6-78)~~

14-3 Enforcement officer.

It shall be the duty and responsibility of the ~~city treasurer~~ city clerk to administer the provisions of this chapter, and pursuant to this duty he shall issue, renew, deny, suspend or revoke ~~massage therapist and~~ massage establishment licenses as required by this chapter. (Ord. No. 256, § 1(10-6-3), 2-6-78)

14-4 Applicability to existing businesses.

The provisions of this chapter shall apply to all activities regulated by this chapter of such persons and businesses described herein, whether such activities were commenced before, on or after February 6, 1978; provided however, that any person licensed under this chapter continuously since October 15, 1977, shall be eligible to renew such license subject to the provisions of Sections 14-30 and 14-31. (Ord. No. 256, § 1(10-6-17), 2-6-78)

14-5 Exemptions.

(a) The provisions of this chapter shall not apply to:

(1) Persons authorized by the laws of this state to practice medicine, osteopathy, chiropractic, podiatry, ~~or~~ naturopathy or acupuncture;

(2) Registered nurses, licensed practical nurses or technicians, when acting under the supervision of a licensed physician, chiropractor, or osteopath;

(3) Persons employed or acting as trainees for any bona fide amateur, semiprofessional or professional athlete or athletic team;

(4) Persons authorized by the laws of this state as barbers or cosmetologists, provided their activity is limited to the head, face or neck;

(5) Persons wholly employed in the sale of clothing, cosmetics, jewelry or sporting equipment insofar as these individuals must incidentally touch a customer to properly fit or sell the product, at its standard market price.

(b) Any exemption granted herein is effective only insofar as and to the extent that the bona fide practice of the business or profession of the person exempted overlaps into the field comprehended by this article, and exemptions granted herein are solely for

those activities which are performed in the course of the bona fide practice of the business or profession of the person exempted. (Ord. No. 256, § 1(10-6-18), 2-6-78)
14-6--14-20 Reserved.

Article II LICENSES FOR THERAPISTS AND ESTABLISHMENTS

Sections:

14-21 Required.
14-22 Application and fee.
14-23 Investigation.
14-24 Special requirements for massage establishment licenses.
14-25 Special requirements for massage therapist license.
14-26 Display.
14-27 Renewal.
14-28 Sale, transfer or expansion.
14-29 Suspension or revocation generally.
14-30 Grounds for revocation, suspension or denial of renewal.
14-31 Effect of denial or termination.
14-32--14-45 Reserved.

14-21 Required.

(a) It shall be unlawful for any person to practice or administer any massage or touching techniques whether for a fee or a gratuity, without first obtaining and maintaining in effect a massage therapist license as required by Title 32 Chapter 42 A.R.S. ~~issued pursuant to this article.~~

(b) It shall be unlawful for any person to conduct or operate a massage establishment without first obtaining and maintaining in effect a massage establishment license issued pursuant to this article.

(c) It shall be unlawful for any person to employ as a massage therapist any person who does not hold a current unrevoked and unsuspended massage therapist license required by Title 32 Chapter 42 A.R.S.

(d) It shall be unlawful for any person licensed as provided in this article to operate under any name or conduct business under any designation not specified in such license. (Ord. No. 256, § 1(10-6-4), 2-6-78)

(e) Persons and massage establishments shall comply with all other applicable ordinances and laws, including the City zoning ordinance.

14-22 Application and fee.

(a) Any person desiring to obtain a massage therapist or massage establishment license shall make application to the city ~~treasurer~~ clerk, who shall refer each such application to the chief of police for appropriate investigation. ~~A person desiring licenses authorizing him to perform the activities of a massage therapist and, in addition, to conduct or operate a massage establishment shall submit two (2) separate applications.~~

(b) The application shall be accompanied by a non-refundable fee of:

(1) Fifty dollars ($50.00) when the application is for a massage establishment license;

(2) ~~Thirty-five dollars ($35.00) when the application is for a massage establishment license, and the applicant is a self-employed person who does not employ any other person as a massage therapist;~~

(3) ~~Twenty-five dollars ($25.00) when the application is for a massage therapist license or trainee license.~~

(c) An applicant for a massage ~~therapist or~~ massage establishment license shall submit the following:

(1) The full legal name and current residence address of the applicant;

(2) Any other names by which the applicant has been known during the previous five (5) years;

(3) The address at which applicant desires to do business;

(4) The two (2) residence addresses immediately prior to the present address of applicant, and the dates of residence at each;

(5) ~~Written statements of at least three (3) responsible adult persons that the applicant is of good moral character~~;

(6) Written proof that the applicant is over the ~~age of twenty-one (21) years if applying for a massage establishment license, or over the~~ age of eighteen (18) years ~~if applying for a massage therapist license;~~

(7) The applicant's height, weight and hair and eye color;

(8) ~~Two (2) portrait photographs, at least two (2) inches by two (2) inches in size, taken within the previous six (6) months;~~

(9) The business, occupation or employment history of the applicant during the previous five (5) years;

(10) The business license history of the applicant; whether the applicant, is previously operating in this or another city or state under license, has had such license revoked or suspended, the reason therefor, and the business activity or occupation subsequent to such suspension or revocation;

(11) All felony and misdemeanor convictions, excluding those for traffic offenses, and the grounds of such convictions;

(12) ~~A certificate from a medical doctor stating that the applicant has, within thirty (30) days immediately prior thereto, been examined and found to be free of any contagious or communicable disease;~~

(13) The applicant's complete fingerprints, recorded by the police department;

(14) ~~The applicant's education, training and experience in the administration, practice or use of massage or touching techniques, including diplomas or credentials from schools or institutions of learning;~~

(15) Such other identification and information as the ~~police department~~ city may require in order to discover the truth of the matters above required to be set forth in the application.

(d) This section shall not apply to renewal licenses. (Ord. No. 256, §§ 1(10-6-5, 10-6-6), 2-6-78)

(e) A list of services to be offered by the massage establishment.

14-23 Investigation.

Any applicant for a license required by this article shall personally appear at the city ~~treasurer'~~ clerk's office and shall present the application containing the information required by Section 14-22. The police department shall have a reasonable time in which to investigate the application and the background of the applicant. Based on such investigation, the police department shall recommend to the city ~~treasurer~~ clerk approval or denial of the license. In addition, the building and housing safety department and the fire department shall inspect any premises proposed as the site of a massage establishment, and shall make separate reports to the city ~~treasurer~~ clerk concerning compliance with the provisions of Section 14-24. (Ord. No. 256, § 1(10-6-7), 2-6-78)

14-24 Special requirements for massage establishment licenses.*

(a) No massage establishment license shall be issued or renewed unless inspection by the building and housing safety department and the fire department indicates the site of the establishment complies with each of the following minimum requirements:

(1) A readable sign shall be posted at the main entrance identifying the establishment as a massage establishment;

(2) Minimum lighting shall be provided in accordance with the Uniform Building Code as adopted by the city, and in addition, at least one artificial light of not less than sixty (60) watts shall be provided in each room or enclosure where services are performed on patrons, and shall be in use when such services are being performed;

(3) Minimum ventilation shall be provided in accordance with the Uniform Building Code as adopted by the city;

(4) Adequate equipment shall be provided for disinfecting and sterilizing instruments used in administering or practicing any massage or touching techniques;

(5) Hot and cold running water shall be provided at all times;

(6) Closed cabinets shall be provided and used, for the storage of clean linens;

(7) Adequate bathing, dressing, locker, and toilet facilities shall be provided for patrons. ~~A minimum of one tub or shower,~~ one dressing room containing a separate locker for each patron to be served, which locker shall be capable of being locked, and a minimum of one toilet and one wash basin shall be provided by every massage establishment; provided, however, that if male and female patrons are to be served simultaneously at said establishment, a separate massage room or rooms, separate dressing facilities and separate toilet facilities shall be provided for male and female patrons;

(8) All walls, ceilings, floors, pools, showers, bath tubs, steam rooms, and all other physical facilities for the establishment must be in good repair and maintained in a clean and sanitary condition. Wet and dry heat rooms, steam or vapor rooms, or steam or vapor cabinets, shower compartments, and toilet rooms shall be thoroughly cleaned each day the business is in operation. Bathtubs shall be thoroughly cleaned after each use;

(9) Clean and sanitary towels shall be provided for each patron of the establishment. The head rest of each table shall be provided with a clean and sanitary towel, paper towel or sheet for each patron;

(10) A minimum of one separate wash basin shall be provided in each massage establishment for the use of employees of any such establishment, which basin shall provide soap or detergent and hot and cold running water at all times and shall be located within or as close as practical to the area devoted to the performing of massage services. In addition, there shall be provided at each wash basin, sanitary towels placed in permanently installed dispensers;

(11) Applicable provisions of the fire code adopted by the city.

(b) No massage establishment license shall be issued or renewed if the applicant has been convicted within the last five (5) years of any felony or other offense involving moral turpitude, if the applicant is addicted to dangerous or narcotic drugs or makes excessive use of alcohol, or if the application was deliberately falsified. (Ord. No. 256, § 1(10-6-8), 2-6-78)

Cross references: Building code, § 4-16 et seq.; fire code, § 10-41 et seq.

14-25 ~~Special requirements for massage therapist license.~~

~~(a) No massage therapist license shall be issued or renewed if the applicant has been convicted within the last five (5) years of any felony or other crime involving moral~~

~~turpitude, if the applicant is addicted to dangerous or narcotic drugs or makes excessive use of alcohol, or if the application was deliberately falsified.~~
~~(b) No massage therapist license shall be issued if the applicant fails to furnish a diploma or certificate of graduation from a recognized school of massage, except in the following circumstances:~~
~~(1) A trainee massage therapist license may be issued if the applicant has furnished written proof that he is enrolled in a recognized school of massage and has completed one hundred fifty (150) hours of the required course of study. Such license shall expire six (6) months after issuance and may at that time or any time prior to expiration be converted to that of a regular massage therapist upon furnishing a diploma or certificate of graduation from a recognized school of massage. No additional fee shall be charged for conversion of the trainee license to a massage therapist license during the term of the trainee license. The new massage therapist license shall be valid until January 1 of the year following the conversion date of the new massage therapist license. The trainee license shall entitle its holder to perform massage therapy for a fee or gratuity under the supervision of a licensed massage establishment or recognized massage school in which he or she is enrolled. The trainee license is subject to all requirements of the massage therapist license except for training, experience and written test.~~
~~(2) A massage therapist license may be issued if the applicant has been licensed to perform any massage or touching techniques in another city or state for two (2) successive years, and if such license has not been suspended, revoked or denied renewal on the grounds of misconduct by the applicant; or if the applicant has had two (2) successive years of experience in performing any massage or touching techniques under the personal direction of a licensed physician, nurse, hospital or physical therapist, providedthat in all cases such experience must include not less than six hundred (600) hours of training, assisting or performing any massage or touching techniques. The applicant shall submit proof of the experience claimed. Such proof may consist of certified copies of licenses, affidavits of former employers or trainers or similar documentary evidence, and the city shall have the right to verify any evidence submitted.~~
~~(c) No massage therapist license shall be issued if the applicant fails to pass the written test developed by the board of massage examiners and city treasurer establishing such applicant's basic knowledge of anatomy, physiology and hygiene. Any applicant failing to pass said test shall be entitled, within four (4) months, to a re-examination upon the payment of an additional fee of fifteen dollars ($15.00), but two (2) such re-examinations shall exhaust the privilege under the original application. All tests shall be conducted on city premises, during regular business hours and the test questionnaires and answers shall remain on city premises at all times. A list of acceptable answers shall be made up prior to the test. A passing score of seventy (70) percent shall be required. Tests shall be conducted and corrected at the direction of the city treasurer. (Ord. No. 256, § 1(10-6-9), 2-6-78)~~

14-26 Display.

Every person to whom a license shall have been granted pursuant to this article shall display the license in a conspicuous place upon the business premises. ~~If the license has been granted to a person, a recent photograph of the licensee shall be attached to the license.~~ (Ord. No. 256, § 1(10-6-10), 2-6-78)

14-27 Renewal.

(a) Annually, on or before the first day of January of each year, every licensed massage establishment shall pay to the city ~~treasurer~~ a renewal fee of twenty-five dollars ($25.00).
(b) ~~Annually, on or before the first day of January of each year, every licensed massage therapist shall pay to the city treasurer a renewal fee of fifteen dollars ($15.00), and shall furnish a new certificate of physical examination taken and issued within the preceding thirty (30) days, by a regularly practicing physician, and declaring the applicant for renewal to be free from any contagious, infectious or communicable disease.~~
(c) ~~The holder of an expired massage therapist license may, within six (6) months from date of expiration thereof, have the certificate renewed upon payment of the required renewal fee.~~ (Ord. No. 256, § 1(10-6-12), 2-6-78)

14-28 Sale, transfer or expansion.

(a) Upon the sale or transfer of any interest in a massage establishment, the license therefor shall be null and void. A new application shall be made by any person desiring to own or operate the establishment. The provisions of Sections 14-23 and 14-24 shall apply to any person, association, firm or corporation applying for a massage establishment license for premises previously used as such establishment.
(b) Any such sale or transfer of any interest in an existing massage establishment, or any application for enlargement or expansion of the building or other place of business of a massage establishment, shall require inspection and compliance with Section 14-24. (Ord. No. 256, § 1(10-6-13), 2-6-78)

14-29 Suspension or revocation generally.

To suspend or revoke a license issued pursuant to this article, the city ~~treasurer~~ clerk or his agent shall deliver or mail by certified mail to his business address as shown on the application or otherwise more recently of record, a written notice that the license is suspended or revoked. The cause for such suspension or revocation shall be set forth in the notice. A suspended or revoked license shall be surrendered to the city treasurer on demand. Revocation or suspension of a license shall not be a defense against prosecution. (Ord. No. 256, §§ 1(10-6-14(b), 10-6-15(b)), 2-6-78)

14-30 Grounds for revocation, suspension or denial of renewal.

The license of ~~a massage therapist or of~~ a massage establishment may be revoked, suspended or denied renewal upon any one or more of the following grounds:
(1) The licensee is guilty of fraud in conducting the business of ~~massage therapist or~~ massage establishment, or of fraud or deceit in obtaining a license to conduct such business;
(2) The licensee has been convicted in a court of competent jurisdiction of a felony or of any offense involving prostitution, homosexual behavior, indecent exposure or pornography;
(3) The licensee is addicted to the habitual use of intoxicating liquors, narcotics or stimulants to such an extent as to incapacitate him or her for the performance of his professional duties;
(4) The licensee is guilty of untrue, fraudulent, misleading or deceptive advertising;
(5) The licensee is grossly ignorant or guilty of willful negligence in the business of ~~massage therapist or~~ massage establishment;

(6) ~~The licensee is engaged in the business of massage therapist or massage establishment under a false or assumed name, or is impersonating another practitioner of a like or different name;~~
(7) The licensee has violated any of the provisions of this chapter. (Ord. No. 256, § 1(10-6-15(a)), 2-6-78)

14-31 Effect of denial or termination.

No person shall apply for any ~~massage therapist or~~ massage establishment license within one year from the denial of any such license to such applicant or form the suspension, revocation or non-renewal of any such license, unless the cause of such denial, suspension, revocation or non-renewal has been to the satisfaction of the city treasurer removed within such time. (Ord. No. 256, § 1(10-6-16), 2-6-78)

14-32--14-45 Reserved.

Article III OPERATIONAL RULES AND REGULATIONS

Sections:

14-46 Operation on same premises as certain other businesses.
14-47 Hours of operation.
14-48 Prostitution, etc.
14-49 Change of location or employment.

14-46 Operation on same premises as certain other businesses.

It shall be unlawful for any person to conduct or operate a massage establishment on the same premises whereon is also conducted the business of a cocktail lounge (unless such is operated by a not-for-profit corporation), photography studio, model studio, art studio, telephone answering service, motion picture theater or bookstore. (Ord. No. 256, § 1(10-6-14(a)(1)), 2-6-78)

14-47 Hours of operation.

It shall be unlawful for any person licensed as provided in this chapter to remain open for business or provide services any time between the hours of 12:00 midnight and 6:00 a.m. (Ord. No. 256, § 1(10-6-4(e)), 2-6-78)

14-48 Prostitution, etc.

It shall be unlawful for any person to practice or administer any massage or touching technique for fee or gratuity:
(1) In a manner or under circumstances intended to arouse, appeal to or gratify sexual desires; or
(2) To any other person whose private parts are not covered by opaque material; or
(3) While wearing clothing patently deviating from the general standard of massage therapists apparel prevailing in the city; or
(4) In any way touch the genitals of the individual receiving the treatment. (Ord. No. 256, § 1(10-6-4(a)(2)), 2-6-78)

14-49 Change of location or employment.

(a) A change of location of a massage establishment may be approved by the ~~police department~~ city, provided all ordinances and regulations of the city are complied with and a fee of ten dollars ($10.00) is paid to the city ~~treasurer~~.

(b) ~~Notification shall be made to the city treasurer by a massage establishment whenever a licensed massage therapist leaves or enters the employ of such establishment.~~ (Ord. No. 256, § 1(10-6-11), 2-6-78)

CITY COUNCIL AGENDA

CITY COUNCIL CHAMBERS . 11465 WEST CIVIC CENTER DRIVE . AVONDALE, AZ 85323

REGULAR MEETING
December 18, 2006
7:00 PM

CALL TO ORDER BY MAYOR ROGERS
PLEDGE OF ALLEGIANCE
MOMENT OF REFLECTION

1 ROLL CALL AND STATEMENT OF PARTICIPATION BY THE CITY CLERK

2 UNSCHEDULED PUBLIC APPEARANCES

(Limit three minutes per person. Please state your name.)

3 CONSENT AGENDA

Items on the consent agenda are of a routine nature or have been previously studied by the City Council at a work session. They are intended to be acted upon in one motion. Council members may pull items from consent if they would like them considered separately.

a. APPROVAL OF MINUTES
Regular meeting of December 4, 2006

b. SPECIAL EVENT LIQUOR LICENSE - INTERNATIONAL HISPANIC NETWORK
Staff is requesting that Council consider a request for a special event liquor license from Mr. Mike Acevedo,International Hispanic Network Fellowship Program, 4125 East Montecito, Phoenix for a fundraiser dance to be held on December 31, 2006 from 7:00 p.m. through 1:00 a.m. at Estrella Vista Reception Center, 1471 N. Eliseo C Felix Jr. Way. City Council will take appropriate action.

c. AMENDMENT NO. 1 - PLANNING AND ENGINEERING SERVICES AGREEMENT - AMEC ENGINEERING - ENVIRONMENTAL SITE ASSESSMENT AND SITE REMEDIATION REPORT - 4TH STREET FIELD OPERATIONS SITE
Staff is requesting that the City Council approve Amendment No. 1 to the Planning and Engineering Services Agreement with AMEC Engineering for an Environmental Site Assessment and Site Remediation Report at the 4th Street Field Operations Site. The Council will take appropriate action.

d. AMENDMENT NO. 3 - CONSTRUCTION MANAGER AT RISK AGREEMENT - PIERSON CONSTRUCTION - 4TH STREET WASTEWATER LIFT STATION IMPROVEMENTS AND BACKUP FORCE MAIN PROJECT

Staff is requesting that the City Council approve Amendment No. 3 to the Construction Manager at Risk Agreement with Pierson Construction Corporation for the 4th Street Wastewater Lift Station Improvements and Backup Force Main Project in the amount of $500,000 with the work to be performed on a time and material basis for a total contract amount of $3,851,218 and authorize the Mayor or City Manager and City Clerk to execute the necessary documents. The Council will take appropriate action

e. **AMENDMENT NO. 4 TO THE CONTRACT WITH SYNAGRO WEST, INC., FOR DEWATERED SLUDGE HAULING AND DISPOSAL**
Staff is requesting that the City Council approve Amendment No. 4 for a one-year extension to the existing Dewatered Sludge Hauling and Disposal contract with Synagro West, Inc., and authorize the Mayor or City Manager and the City Clerk to execute the necessary documents. The Council will take appropriate action.

f. **PROFESSIONAL SERVICES AGREEMENT - DESIGN AND CONSTRUCTION MANAGEMENT - CAROLLO ENGINEERS - VAN BUREN WATER MAIN, 101ST TO 105TH AVENUE AND EMERGENCY CONNECTION**

Staff is requesting that the City Council approve a Professional Services Agreement for Design and Construction Management services with Carollo Engineers for the Van Buren Water Main, 101st to 105th Avenue and Emergency Connection in an amount not to exceed $149,978 and authorize the Mayor or City Manager and City Clerk to execute the necessary documents. The Council will take appropriate action.

g. **PROFESSIONAL PLANNING AND ENGINEERING SERVICES AGREEMENT WITH DMJM HARRIS ENGINEERING FOR A DESIGN CONCEPT REPORT AND CONSTRUCTION IMPROVEMENT PLANS AT AVONDALE BOULEVARD AND INTERSTATE 10**
Staff is requesting that the Council appove a Professional Planning and Engineering Services Agreement with DMJM Harris Engineering for a Design Concept Report and Construction Improvement Plans for Avondale Boulevard and Interstate 10, in the amount of $79,968 . The Council will take appropriate action.

h. **PROFESSIONAL SERVICE AGREEMENT WITH KIMLEY-HORN & ASSOCIATES, INC. FOR STREET IMPROVEMENTS OF 4TH STREET FROM LOWER BUCKEYE ROAD TO WESTERN AVENUE**
Staff is requesting that the Council approve a Professional Service Agreement with Kimley-Horn & Associates, Inc. for street improvements on 4th Street from Lower Buckeye Road to Western Avenue in the amount of $114,915. The Council will take appropriate action.

i. **RESOLUTION 2618-1206 - ADOPTION OF COUNCIL GOALS FOR FY 2007-2008**
The Council will consider a resolution adopting Council Goals for FY 2007-2008. The Council will take appropriate action.

j. **ORDINANCE 1237-1206 AMENDING CHAPTER 23 OF THE CITY CODE, RELATING TO SPEED LIMITS, TRUCK ROUTES AND SCHOOL ZONES**
The Council will consider an ordinance amending Chapter 23 of the City Code, Relating to Speed Limits, Truck Routes and School Zones. The Council will take appropriate action.

k. **ORDINANCE 1225-1206 - CORRECTION TO 1997 ROW ANNEXATION ORDINANCE**
The City Council will consider an ordinance correcting the maps and legal descriptions included in ROW Annexation Ordinance 646-97 adopted in June 2, 1997. The Council will take appropriate action.

l. **ORDINANCE 1223-1206 RESCINDING ORDINANCE 926-03 AND APPROVING ACQUISITION OF WATERLINE EASEMENT(S) FROM FLOOD CONTROL DISTRICT OF MARICOPA COUNTY**
Staff is requesting that the City Council adopt an ordinance rescinding Ordinance 926-03 and approving acquisition of Waterline Easement(s) from Flood Control District of Maricopa County needed to accomodate modifications to avoid utility conflicts in the alignment identified during construction. The Council will take appropriate action.

4 **ORDINANCES 1226-1206, 1227-1206, 1228-1206, 1229-1206, 1230-1206, 1231-1206, 1232-1206, 1233-1206, 1234-1206, 1235-1206 AUTHORIZING AN INCREASE IN THE CITY'S DEVELOPMENT FEES.**

The Council will consider ordinances amending the City Code, relating to Development fees, providing for a new development fee amount and effective date. The Council will take appropriate

action.

5 DISCUSSION ITEMS

Council will discuss items listed below and possibly give direction to city staff to research and prepare item for future meeting.

6 EXECUTIVE SESSION

a. The Council may hold an executive session for the following purposes: (i)Pursuant to Ariz. Rev. Stat. § 38-431.03 (A)(7) for discussion or consultation with City representatives in order to consider its position and instruct its representatives regarding negotiations for the purchase of property; (ii) Pursuant to ARIZ. REV. STAT§ 38-431.03 (3) for discussion and consultation for legal advice with the city attorney regarding a development agreement

7 ADJOURNMENT

Respectfully submitted,

Linda Farris, CMC
City Clerk

Any individual with a qualified disability may request a reasonable accommodation by contacting the City Clerk at 623-478-3030 at least 48 hours prior to the council meeting.

CITY COUNCIL REPORT

SUBJECT:
Approval of Minutes

MEETING DATE:
December 18, 2006

TO: Mayor and Council

FROM: Linda Farris

THROUGH: Charlie McClendon, City Manager

ATTACHMENTS:

Click to download

No Attachments Available

CITY COUNCIL REPORT

SUBJECT:
Special Event Liquor License - International Hispanic Network

MEETING DATE:
December 18, 2006

TO: Mayor and Council

FROM: Deann Helman

THROUGH: Charlie McClendon, City Manager

PURPOSE:

Staff is requesting that Council consider a request for a special event liquor license from Mr. Mike Acevedo,International Hispanic Network Fellowship Program, 4125 East Montecito, Phoenix for a fundraiser dance to be held on December 31, 2006 from 7:00 p.m. through 1:00 a.m. at Estrella Vista Reception Center, 1471 N. Eliseo C Felix Jr. Way.

DISCUSSION:

The City Clerk's Office has received an application for a special event liquor license from Mr. Mike Acevedo, representing the International Hispanic Network Fellowship Program, to be used for a fundraiser dance to be held on December 31, 2006 at Estrella Vista Reception Center, 1471 N. Eliseo C Felix Jr. Way.

Estrella Vista Reception Center has agreed to suspend their liquor license for the duration of this event.

Staff has reviewed this application using the 14 factors set forth in Ordinance 1031-04. The findings are as noted below:

1) The event will be open to the public.
2) A background check of the organizer, Mr. Mike Acevedo, revealed no contact with the Avondale Police Department
3) The nature of the event includes musical entertainment.
4) Security measures taken by the applicant – Private security company.
5) & 6) Beer, wine, and spirituous liquor will be sold at the event in glasses, bottles, plastic containers, disposable cups, and cans.
7) Has this event created any disturbances in the past three years – first year in this area.
8) Estrella Vista Reception Center has no potential problems in the neighborhood as activities are inside.
9) The event will be held on December 31, 2006 from 7:00 p.m. through 1:00 a.m.
10) Sanitary facilities available to the participants – Reception Center has facilities.
11) Zoning is C-2 Community Commercial. Planning has determined that the proposed use is compatible with the current zoning designation.
12) The anticipated total daily attendance is 300 – 400.
13) Two main speakers and five monitors will be used.
14) No traffic control measures are necessary per the Police Department.

The required fees have been paid.

RECOMENDATION:

Staff is recommending that Council approve a special event liquor license for the International Hispanic Network Fellowship Program, 4125 East Montecito, Phoenix for a fundraiser dance to be held on December 31, 2006 from 7:00 p.m. through 1:00 a.m. at Estrella Vista Reception Center, 1471 N. Eliseo C Felix Jr. Way.

ATTACHMENTS:

Click to download

- SP - National Latino Foundation-City Application
- SP - National Latino Foundation-State Application
- SP - National Latino Foundation-Comments

City of Avondale

SPECIAL EVENT PERMIT AND SPECIAL EVENT LIQUOR LICENSE APPLICATION

NAME OF EVENT "OYE MI SALSA" New Year's Eve Dance

EVENT DATE (S) Dec. 31, 2006

EVENT LOCATION Estrella Vista Reception Cntr.

Date Received: _____

City Clerk's Department
11465 W. Civic Center Drive Suite 200
Avondale, Arizona 85323
Phone: 623-478-3030 Fax: 623-478-3804

Special Events Permit and Special Event Liquor License Application

Date of Application: 11/14/06 Permit Application #: _____

This application MUST be submitted a minimum of 60 days prior to the event.

All applicants will be charged facility rental fees as appropriate and are expected to fully reimburse the City for all services related to event production which may include, but are not limited to; police, fire/EMS, park and facility maintenance, field services, sanitation, engineering, site supervisors, and all necessary permit fees including: special event liquor, tents, generators, parades, fireworks, barricades, carnival, exhibition/tradeshow, street festivals, and haunted houses. It is expected that all applicants have their events removed and areas reopened the following day.

A comprehensive site plan including entrances to the event, location of fences (including type and height), stage, sound amplification systems, tents, cooking areas, portable restrooms or permanent restroom facilities, generators, carnival or amusement rides, fireworks, parking areas, entrances to areas for alcohol consumption, alcohol service areas, security check areas, street or alley closures, location of emergency medical services, parade routes, and all other special features that may apply, must accompany this application. The plan must also include traffic flow and controls.

SECTION 1: APPLICANT INFORMATION

Carmen M. Gonzales
Name of applicant / Must be on site during the event

(623) 932-4455
Phone Number

(623) 932-1491
Fax Number

(602) 997-7959
Cellular Phone Number

( )
Pager Number

1471 N. Eliseo C. Felix Jr. Way
Business Address

Avondale, AZ 85323
City, State, Zip

info@EVRC.net
E-Mail Address

Estrella Vista Reception Inc.
Corporation/Organization Name or D.B.A.

AZ	86-1037795	20075396
State of Incorporation	Tax ID#	City Sales Tax ID#

SECTION 2: EVENT INFORMATION (Criteria #1, 3, 8, 9, 12 and 13 of Ordinance)

Is this event open to the public? ☒ Yes ☐ No

"OYE MI SALSA" New Year's Eve Dance
Name of Event

New Year's Eve dance
Nature of Event (carnival, dinner, dance, concert, bazaar, etc.)

12/31/06 - Sunday
Event Date(s) / Days of the Week

Event schedule and anticipated attendance:

	DATE:	DAY:	HOURS: FROM A.M./P.M	HOURS: TO A.M./P.M	ANTICIPATED DAILY ATTENDANCE	ANTICIPATED PEAK DAILY ATTENDANCE
DAY 1:	12/31/06	Sun.	8 pm	1 am	300	300
DAY 2:						
DAY 3:						
DAY 4:						
DAY 5:						
DAY 6:						
DAY 7:						
DAY 8:						
DAY 9:						
DAY 10:						

What is attendance estimate based on? (Past event, advance ticket sales, etc) Advance ticket sales

12/31/06 3:00 pm — 1/1/07 1:00 AM
Set up (Date/Time) — Take Down (Date/Time)

Estrella Vista Reception Center
1471 N. Eliseo C. Felix Jr. Way Avondale AZ
Location of Event / Address (Please complete Section 4 of this application to address traffic issues)

Fundraiser for College Scholarships — Intl. Hispanic Network
Purpose of Event (Fundraiser, fellowship, etc.) — Event Sponsor(s)

Have you hired a promoter to organize this event? ☒ Yes ☐ No

If yes, provide promoter's information:

Salsa y Sabor Productions P.O. Box 97957 Phx, AZ 85060 602 339-4115

Promoter's Name | Address | Phone Number

Has this event ever been held at another location? ☒ Yes ☐ No If yes, please explain:

Date(s)	Location(s)	Contact Name	Phone Number
10/2004	Hyatt Regency Phx.	Darcy Carter	602-252-1234
04/2006	Hyatt Regency Phx.	Darcy Carter	"

If held at another location previously, were there any problems (neighborhood disturbance, noise, traffic, etc.) ☐ Yes ☒ No Nature of problems: _____

Will alcohol be served at the event? ☒ Yes ☐ No
If yes, please complete Section 6 of this application.

Will there be a charge for admission? ☒ Yes ☐ No

If yes, provide all price categories: $50.00 per person

Will there be entertainment? ☒ Yes ☐ No If yes, complete the following (attach additional sheet if necessary):

Type of Entertainment	Name of Entertainer	Scheduled Time
Live Band + DJ	Orquesta Salsarenque + Latin Lady D.J. Margarita	8pm-1am

If music, what type of music? Live Band + DJ mix # of stages 1-indoor

Will a professional company be used? ☒ Yes ☐ No Indicate the number of speakers to be used and the size of amplification system. Please see Attachments

Based on the nature, duration, time of day, type of entertainment, past experience, etc., of the event would it be reasonable to anticipate any problems? ☐ Yes ☒ No If yes, what measures will be taken to prevent problems and/or deal with problems if they arise? _____

- ***The City of Avondale reserves the right to control the level of sound on any entertainment production. Sound levels shall be adjusted to conform to all applicable laws and ordinances.***

- ***Due to the physical location of some facilities, the complications of outdoor performance and wind changes, there can be significant challenges regarding sound levels with neighboring areas.***

Will there be any novelty items sold? ☐ Yes ☒ No If Yes, please describe:

Item Vendor Selling Price(s)

Will there be any contracted concessionaires/caterers? ☐ Yes ☒ No

Name of concessionaire/caterer Address Phone Items being sold

How many vendors are anticipated? Ø

(All vendors must have a City Of Avondale tax/license. See attached forms & regulations). See Addendum A

SECTION 3: EVENT LOGISTICS AND SPECIAL FEATURES (must be included in site plan mentioned in page 1) (Criteria #10 and 11 of Ordinance)

Event location complies with zoning regulations ☒ Yes ☐ No

WILL THE EVENT INCLUDE ANY OF THE FOLLOWING?

- TENTS OR CANOPIES ☐ Yes ☒ No If yes, provide the following:

Company _____

Address _____

Contact _____ Phone: _____

Number of Tents _____ Size (s) _____

- ***Tents over 200 sq.ft. and canopies over 700 sq. ft. require permits from the Avondale Fire Department. All tents and canopies will be inspected for fire safety by the Fire Department prior to the event. Contact the Fire Marshal at 623-478-3163. Fee for permit; $200 single tent or canopy. Each additional tent or canopy $100. See Addendum B***

- OPEN FLAMES OR COOKING ☐ Yes ☒ No If yes, provide the following:

- **Fire Marshal will be on site to inspect all vendors.**

- FIREWORKS ☐ Yes ☒ No If yes, provide the following:

Company _____

Address _____

Contact _____ Phone: _____

Carmen Gonzales

From: mike.acevedo@phoenix.gov
Sent: Wednesday, November 15, 2006 11:37 AM
To: info@evrc.net
Subject: Fw: Dj Equipment Description / Specifications

Carmen, Here is the equipment for the DJ. My partner Margarita will send the equipment for the band. Mike Acevedo

----- Forwarded by Mike Acevedo/HOU/PHX on 11/15/2006 11:34 AM -----

Latinladydjmv@aol.com

11/15/2006 10:35 AM

To Mike Acevedo/HOU/PHX@PHXENT
cc
Subject Dj Equipment Description / Specifications

Second Generation EON Powered Speakers

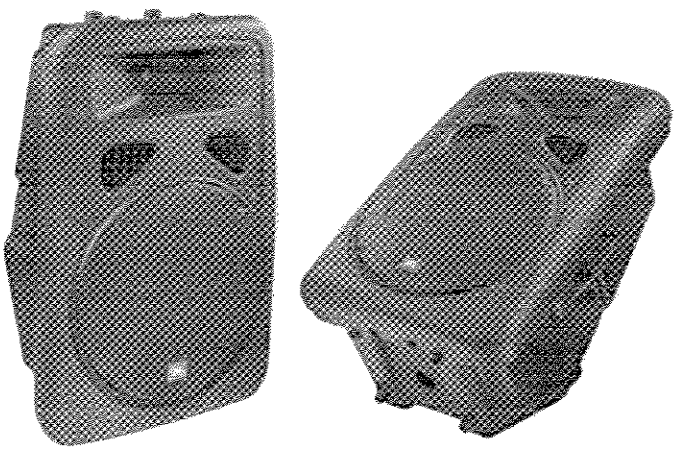

JBL EON15-G2 featuring **400 watts** of bi-amplified power (**300 watts for low frequencies and 100 watts for high frequencies**). The EON15-G2 is at home as a main PA speaker or as a vocal or instrument monitor.

The flagship of the new series is the JBL EON15 G2, delivering 300 watts of power to a 15" neodymium Differential Drive® LF driver. The driver boasts a dual neodymium magnet and dual voice coil motor that efficiently delivers high output from a lightweight woofer. Meanwhile, the HF amplifier delivers 100 watts of power to a 1.75" titanium diaphragm compression driver with Ferro-fluid cooling.

Denon DJ DN-D4000 CD/MP3 Player

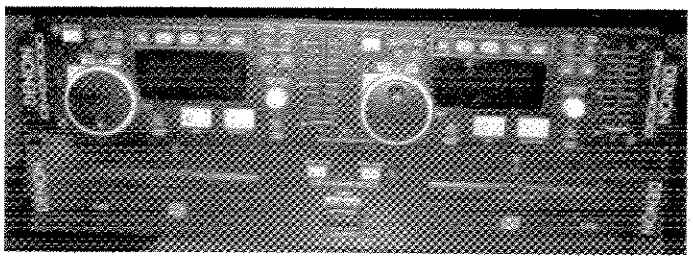

The DN-D4000 comes complete with a host of Denon's disc control playback options. Along with the ability for momentary Pitch Bend adjustments (+/-18%) for fine tuning beats for beat mixing and an overall Pitch Control (+/-4%, +/-10%, +/-16%), a unique Jog Bend function facilitates extreme playback speeds (adjustable via the inner Jog Wheel) of -35% to +50%. The front-panel interface of the unit includes a 1x/10x Rotary Track Select Knob for manual selection of tracks, a 50mm Jog/Shuttle wheel for cueing of selected audio, and illuminated transport-style controls with tactile feedback. Program Play of up to 25 tracks per disc with storage for programmed playback for up to 3 discs per drive is also provided along with Repeat Play (Track Repeat, Disc Repeat) and Relay Play for playing tracks from drive to drive automatically. A Fader Start function provides playback control of both drives via cross fader manipulation on compatible fader start mixers, and is able to engage four different Cue points by simply moving the fader. In addition, a convenient Power On Play function can be used for unattended startup of continuous playback of two CDs when used in conjunction with an external timer.

Other user feedback features on the DN-D4000 include bright disc tray LEDs that light when disc trays are open to provide a visual warning in low-light environments, a 10-segment track time display providing at-a-glance track playback position, and an EOM end of track alert. An auto-protect Sleep function shuts down the drive mechanisms after extended periods of inactivity for CD mechanism longevity. Additionally, the unit has digital S/PDIF output for direct digital dubbing or connection to a compatible outboard processor or mixer. The DN-D4000 is also supports future firmware upgrades via CD-ROM disc.

Denon Denon DN-X400 Professional DJ Mixer with Digital Outputs

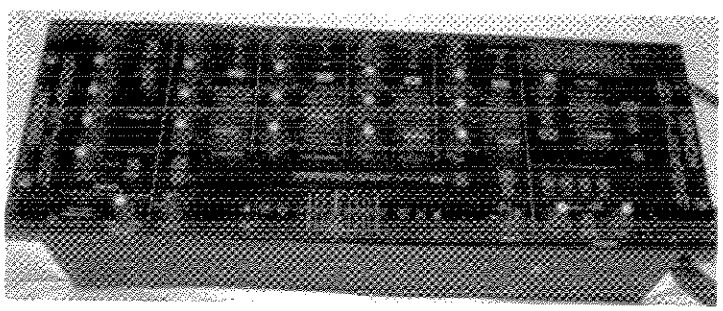

- 2-digital outputs (Coaxial & Optical)
- Track Mark (increments digital tracks from the mixer while recording)
- 8 line / 2 phono inputs
- 2 Microphone inputs
- Mic post on/off
- Master output (balanced)
- Master and Rec output (unbalanced)
- Booth/Zone output (balanced)
- Booth/Zone output level adjustment with meter display

- Subwoofer output (balanced, mono)
- Subwoofer output freq control
- Send / Return effect loop (stereo)
- Input Gain control (each channel)
- PFL adjustment
- -26dB ~ +10dB HI, MID, LOW tone controls
- Split cue H/P monitor and display
- Cross fader channel assign selector, 1~4
- Cross fader contour adjustment
- Cue, program pan
- 45mm VCA faders
- Fader Start: compatible with DENON's DN-1800F, DN-2100F, DN-2600F or other brand pulse start CD players
- Industrial build with high performance parts
- Superb audio fidelity (extremely clean
- Small chassis, only 4U rack spaces

- Re: Outdoor Event / Indoor Event
- If the event is to be held outdoors I require the following;

> 1 - 10 x 10 canopy (fir shade).
> 2 - 6' banquet tables (for Dj equipment & music media).
> Electrical outlet within 50' of set up area

n/A

- Indoor Event:

Same as above without canopy

Carmen Gonzales

From: Latinladydjmv@aol.com
Sent: Friday, November 17, 2006 11:52 AM
To: info@evrc.net
Cc: mike.acevedo@phoenix.gov
Subject: RE: New Year's Eve / Sound Specifications / Equipment

Hi Carmen,
Here's the information you requested. I believe Mike sent you the specs on my Dj equipment previously. Here's what I received from Orquesta Salsarengue. Let me know if there's anything else you require. Thanks. Margarita.

We have two amplifiers: a 2,000 watt amplifier for the main speakers and a 1,200 watt for the onstage monitors. we are currently running about 3,000 watt total...we will need two wall outlets to run the system.

There are 2 main speakers and 5 monitors

There is also a bass amp and the piano amp. These amps are also used as monitors for those instruments, They run about 200 watts each. thanks.

Please let me know if there's anything else they need.....Thanks Tony

**** In accordance with the National Fire Code and FAA requirements, the fireworks production company must fax written notification to the Phoenix Terminal Radar Approach Control (TRACON) at 602-220-4436 Attention Traffic Management Unit one week prior to the event. A copy of the notification must be forwarded to the City of Avondale Fire Marshal.***

**** Fireworks require special permits from the City of Avondale Fire Department. Contact the Fire Marshal at 623-478-3163 (See Addendum C)***

- PORTABLE RESTROOMS ☐ Yes ☒ No If yes, provide the following:

What sanitary facilities will be available to attendees? (Indicate location on site plan)

Company _____

Address _____

Contact _____ Phone: _____

**** Guideline for anticipated attendance/portable restrooms ratio for a 6 hour event: 80 people per unit if alcohol is served; 100 people per unit if alcohol is not served.**

- SANITATION (Indicate location on site plan)

Number of trash cans 2

Location Estrella Reception Center

- ELECTRICAL SERVICES/GENERATORS ☐ Yes ☒ No If yes, provide the following:

Company _____

Address _____

Contact _____ Phone: _____

CARNIVAL/AMUSEMENT RIDES ☐ Yes ☒ No If yes, provide the following:

Company _____

Address _____

Contact _____ Phone: _____

**** An additional special permit from the City of Avondale Fire Department is required. Contact the Fire Marshal at 623-478-3163 (See Addendum B).***

- SIGNS/BANNERS ☒ Yes ☐ No If yes, provide the following:

Content Announcement of Dance + Location

Locations: N/E Corner of Van Buren St. + Eliseo Felix Jr. Way

- INFLATABLES ☐ Yes ☒ No If yes, provide the following:
(Requires additional insurance – see Section 10)

Company _____

Address _____

Contact _____ Phone: _____

How will inflatables be secured? _____

- OTHER – Description of any other activities at the event

_____

_____

_____

PLEASE NOTE THAT ANY OR ALL OF THE ABOVE SPECIAL FEATURES NEED TO COMPLY WITH ZONING REGULATIONS.

SECTION 4: STREETS / TRAFFIC (must be included in site plan mentioned in page 1) (Criteria # 14 of Ordinance) *(See Addendum D).*

DOES THE EVENT PROPOSE CLOSING, BLOCKING, OR USING OF ANY OF THE FOLLOWING: *(See Addendum E)*

- CITY STREETS ☐ Yes ☒ No If yes, provide the following:

Street	From/To	Date(s)	Time(s)

- CITY SIDEWALKS ☐ Yes ☒ No If yes, provide the following:

Sidewalk	From/To	Date (s)	Time(s)

- CITY ALLEYS ☐ Yes ☒ No If yes, provide the following:

Alley	From/To	Date (s)	Time(s)

- PUBLIC PARKING LOTS ☐ Yes ☒ No If yes, provide the following:

Parking Lots	From/To	Date (s)	Time(s)

Number of parking spaces available 133 on our property - Estrella Vista Reception Cntr

If parking lots are not used, where will attendees park?

- ***Street closures must be approved by the Police, Fire and Field Operations Departments.***
- ***Alternate routes and a list of specific traffic controls for area residents should be included in this plan.***

SECTION 5: USE OF CITY FACILITIES *(See Addendum E and F)*

Facilities must be returned to original condition.

Will any City Facilities be used? ☐ Yes ☒ No If yes, provide the following:

Facility	Person Contacted	Phone

Will any City electric or water hookups be needed? ☐ Yes ☐ No If yes, provide the following:

Electric Location	Service needed (in amps)

Water Location	Service Needed

SECTION 6: ALCOHOL (must be included in site plan mentioned on page 1) (Criteria # 2, 5, 6 and 7 of Ordinance)

- **Minors are not allowed in areas designated for alcohol consumption.**
- **Glass containers and bottles are NOT allowed in City parks.**

- **Applicant must be a member of the qualifying organization and authorized to submit application.**
- **Security is required as specified in Section 7.**

Will there be alcohol at the event? ☒ Yes ☐ No If Yes, please answer the following:

- Will alcohol be sold? ☒ Yes ☐ No
- Will alcohol be given away? ☐ Yes ☒ No
- Is alcohol included in the admission price to the event? ☐ Yes ☒ No
  This applies to charitable, religious, fraternal or political groups only.

If you answered yes to any of the above, a special event liquor license is required. In addition to providing the following information to the City, the Arizona Department of Liquor Licenses and Control's Application for Special Event License must be submitted. Please submit this application to the City, the City Council will review the application and notify you of approval or denial.

Which type of license will be used for the event?

☐ Extension of Premises (attach State of Arizona Application) ***(See Addendum G)***

☒ Special Event Liquor License (attach State of Arizona Application) ***(See Addendum H)***

International Hispanic Network Fellowship Program at ASU — Scholarship Program — 01560127

Non-Profit Organization's Name — Type of organization — 501-C-3 #

Mike Acevedo — 602-339-4115

Name of Contact at Charity or Organization — Phone Number

Mike Acevedo — Anthony D. Gonzales, Carmen M. Gonzales } Facility Owners

On-Site Agent Responsible for Liquor

Anticipated attendance in liquor area: 350

HOURS:

	DATE:	DAY:	FROM A.M./P.M	TO A.M./P.M	ANTICIPATED DAILY ATTENDANCE	ANTICIPATED PEAK DAILY ATTENDANCE
DAY 1:	12/31/06	Sunday	8 pm	1 Am	350 MAX.	
DAY 2:						
DAY 3:						
DAY 4:						
DAY 5:						
DAY 6:						
DAY 7:						
DAY 8:						
DAY 9:						
DAY 10:						

Describe methods that will be used to identify attendees under the age of 21 and ensure they are not served alcohol? Dance will be marketed as "21+ over" event, however Colored hand stamps will be used. Red ink for attendees under the age of 21. Black ink will be used for attendees over the age of 21. No alcohol will be served without hand stamp. *Under 21 must be accompanied by an adult.

What controls will be used to keep attendees under the age of 21 from obtaining alcohol at the event? Trained professional bartenders will be used. All attendees will be carded + hand will be stamped. Security officer will be indoors monitoring the event. No alcohol will be served without a hand stamp.

Will more than 50% of the event's gross revenues be derived from alcohol sales? ☒ Yes ☐ No

Type of alcohol to be served: X Beer X Wine X spirituous liquor

How will the alcohol be served? *** Bottles or glass are not allowed in City facilities**

X glasses X bottles X Plastic Containers X disposable cups X cans

How will alcohol be obtained? thru liquor distributors

Has the applicant been convicted of a felony in the past five years? ☐ Yes ☒ No

If yes, please provide a detailed explanation including dates, nature, location and disposition.

Has the Applicant/Organization ever had a liquor license or event permit denied, revoked or suspended? ☐ Yes ☒ No If yes, please explain:

If a promoter is used, has the promoter obtained a special event liquor license in the City of Avondale within the last three years that has created neighborhood disturbances? ☐ Yes ☒ No
If yes, please give specific information including event, dates and nature of disturbance.

SECTION 7: EVENT SECURITY (must be included in site plan mentioned on page 1) (Criteria #4 of Ordinance)

A security plan must be submitted with this application for all events. The Avondale Police Department will review the plan and may require the use of off-duty police officers for the event at the applicant's expense. Off-duty Avondale police officers are required for any special event liquor license. Security controls must also be shown in site plan.

****The City of Avondale only allows security companies that are licensed and bonded in the State of Arizona.***

Will private security be used at the event? ☒ Yes ☐ No If yes, provide the following:

Sentinel Security Intl. — Security Company

#0106012 — Arizona Department of Public Safety Identification Number

3221 E. Windsor — Address

602 791-6705 — Phone number

Jose Orozco — Contact Person

602-754-8197 — Phone Number (if different than above)

Number of personnel contracted for: 4

Scheduled hours personnel will be at the event: 7pm - 1:30 am

Will the event be requesting off-duty Avondale Police Officers? ☐ Yes ☒ No

If yes, provide the following: * We always ratio 1 officer per 100 attendees. We will have 4 officers on duty for this 350 attendee(s) event.

FOR EVENTS WHERE ALCOHOL WILL BE AVAILABLE, THE SECURITY PLAN MUST INCLUDE THE FOLLOWING INFORMATION. ADHERANCE TO THESE REQUIREMENTS IS NECESSARY IN ORDER FOR THE APPLICATION TO BE APPROVED. See attached Plan.

- Type of event, activities, clientele, location, and time of day.
- Number and type of physical control barriers; i.e. fencing, barricading, walls, locked or limited access doors, that control and limit access to and from areas where alcohol is being sold or served.
- Sales and consumption area must be designated. It must include controlled entrances and exits to limit access to people who can legally buy and consume alcohol.
- Minors are not allowed in the area designated for alcohol.

Security Requirements for the Alcohol Area

- Security needs are determined by the number of people estimated to be in attendance in the area designated for the sale and consumption of alcohol. **Note that under estimations will result in additional security being required during the event. Failure to provide**

Security Plan for Estrella Vista Reception Center
For "Oye Mi Salsa" New Year's Eve Dance
Sunday, December 31, 2006

Estrella Vista Reception Center is a catering/banquet hall that opened in April of 2005. Our main business are any type of gatherings that include food, i.e., weddings, quinceaneras, dinners, meetings, etc. In December of 2005, we were granted a #7, Beer & Wine license for our facility. The 5,500 sq. ft. ballroom and the fenced outdoor patio was deemed a licensed premise. Our Liquor Agent is Randy D. Nations.

We have a private security company (Sentinel Security International) to handle our security for all of our events. We require 1 officer for every 100 people.

The "Oye Mi Salsa" New Year's Eve dance is an event that is similar to the 350 people guest events we have every weekend except that we are requesting to suspend our #7 Beer & Wine license for a Special Event Liquor License for the non-profit organization we will be hosting. All proceeds of this event will go to the International Hispanic Network Fellowship Program at ASU.

The event is scheduled for Sunday, December 31, 2006 from 8:00 p.m. to 1:00 a.m. This will be a dance. The maximum attendance for this event is 350. No formal catering has been requested, however, snacks will be provided on the tables. The event is an 21+ event as stated on the attached flier. In the past, this event has been held at the Hyatt Regency Hotel is Phoenix without any problems whatsoever. For this event, there have been some requests made in the past for teenagers (18 yrs of age) to attend the dance with their parents. This has been allowed having the minors' hand stamped to signify the person is under 21 years of age. We are proposing to do the same. Minors (18 yrs of age to 20 years of age) will be allowed accompanied by a parent. No one under the age of 18 will be allowed. Colored hand stamps will be used on everyone entering the facility – red ink for under 21 and black ink for 21+.

The Bar area will have a temporary barricade indicating that no one under the age of 21 will be allowed past the barricade. We will be hiring 4 security officers for the event. They all routinely monitor both outdoors and indoors.

additional security will result in immediate suspension of the Special Event Liquor License. All liquor sales and consumption will be stopped immediately.

- One (1) certified Police Officer or state-licensed private security officer for every 100 in attendance in the area designated for the sale and consumption of alcohol is required.
- One (1) second-level supervisor (an officer of the rank of Sergeant or higher) is required for every four (4) police or private security officers employed.
- One (1) third-level supervisor (an officer of the rank of Lieutenant or higher) is required for every four (4) second-level supervisors employed.

EMERGENCY MEDICAL SERVICES (must be included on site plan mentioned in page 1)

Will the event request off-duty Avondale EMTs or paramedics? ☐ Yes ☒ No
If yes, provide the following:

Scheduled hours personnel will be needed at the event:_____
After reviewing the event application, the City may require the use of off-duty EMTs or paramedics for the event. If emergency medical services are required, permittee must provide above information as an amendment to the application before an event permit will be issued. Promoter may be required to provide tent, cots, ice and water. This service is at the expense of the applicant.

SECTION 8: PARADE INFORMATION (must be included on site plan mentioned in page 1)

An additional site plan showing parade route must be attached.

_____
Assembly Area

_____
Disassembly area

Number of Units _____

Description of the units (Motorized, animals, floats, sound amplification).

_____

_____

Attach a proposed route and indicate assembly and disassembly areas.

SECTION 9: PARK/PLAZA AREAS

DOES THE EVENT PROPOSE CLOSURE OR USE OF ANY OF THE FOLLOWING?

- Coldwater Park ☐ Yes ☒ No If yes, provide the following:

Specific Area(s) Date(s) Time(s)

- Friendship Park ☐ Yes ☒ No If yes, provide the following:

Specific Area(s) Date(s) Time(s)

- Sernas Plaza Park ☐ Yes ☒ No If yes, provide the following:

Date(s) Time(s)

- Other ☐ Yes ☒ No If yes, provide the following:

Date(s) Time(s)

SECTION 10: INSURANCE REQUIREMENTS AND CERTIFICATE OF INSURANCE *(See Addendum I)*

All special events that are held on city property or that are co-sponsored by the City of Avondale are required to name the "**City of Avondale as an Additional Insured**" on the Certificate of Insurance. Complete certificates must be received a minimum of five (5) working days prior to the event. Separate certificates of insurance for $2 million are required from all carnival and amusement companies and $5 million from firework companies. For more information, please contact the Risk Management Division at (623) 478-3021. Event permits will not be issued until all insurance requirements are satisfactorily met.

SECTION 11: GENERAL INFORMATION AND CERTIFICATION

MITIGATION OF IMPACT

As an event organizer, you are required to notify residents, businesses, places of worship and schools that may be impacted by the noise and street closures related to the event. The notices should be mailed or hand delivered at least two weeks prior to the event. Information on this information should include, but not be limited to; the date(s), day(s), time(s), location(s) and types of activities taking place during your event. The notice must also include a telephone number of where members of the public can contact your organization if they have concerns or issues that need to be addressed.

FEES

There is no fee to process this application. However, fees may be assessed for some city services. Individual City departments will estimate the cost of accommodating the event. Actual costs may be presented prior to the event or billed by each department and paid by the sponsoring organization upon receipt of billing.

If the event includes the sale of liquor, the fee for a Special Event Liquor License is $25.00 per event day and must accompany this application. Please note that this is in addition to the State's fee.

By signing the below, the applicant is authorized to commit the organization and therefore be financially responsible for any costs and fees incurred by or on behalf of the event.

CERTIFICATION

I hereby certify that I am the applicant filing this application as listed in Section 1 and the statements made in this application are true and complete to the best of my knowledge, and that I am authorized to execute the application. Intentional omissions or falsification of information is sufficient grounds for denial of the application and subsequent revocation of the permit. I agree to indemnify the City and its respective officers, agents and employees from any and all losses, claims liabilities, damages, costs, and expenses, including reasonable attorney's fees and court costs, resulting from the conduct of the applicant, sponsor or promoter, their employees, suppliers, vendors or agents, or any of their guests, invitees or licensees with regard to the event applied for. I agree to indemnify the City and its respective officers, agents and employees from any and all losses, claims, liabilities, damages, costs and expenses, including reasonable attorney's fees and court costs, resulting from any facility, park or lake closure due to inclement weather, an issued warning or other emergency situation. In such an instance, I understand that all event participants must follow the City's guidelines and procedures for lake/facility evacuation and that this event is being held inside the City limits and all City rules and regulations apply. I also understand that the City reserves the right to determine that park facilities are unusable as a result of inclement weather.

Carmen M. Torres — 11/15/06

Applicant's Signature — Date

(ACKNOWLEDGMENT)

State of Arizona)
)ss.
County of Maricopa)

This instrument was acknowledged before me this 15 day of November, 2006, by

_____.

KARINA TORRES
NOTARY PUBLIC - ARIZONA
MARICOPA COUNTY
My Comm. Exp.:July 26, 2010

Notary Public in and for the State Arizona

My Commission Expires:

July 26, 2010

Please submit application to:
City Clerk's Department
11465 W. Civic Center Drive Suite 200
Avondale, Arizona 85323

Addendum A	**Business license application**
Addendum B	**Tent, canopy, carnival and amusement ride permit application**
Addendum C	**Fireworks permit**
Addendum D	**Street closure application**
Addendum E	**Facility use agreement (Civic Center)**
Addendum F	**Facility use application (other City facilities)**
Addendum G	**Extension of premises application (State)**
Addendum H	**Special event liquor license application (State)**
Addendum I	**Insurance Specifications**
Addendum J	**Applicant's personal information**

Estrella Vista Reception Center

November 14, 2006

Department of Liquor Licenses & Control
800 W. Washington
Phoenix, AZ 85007 – 2934

To Whom It May Concern:

Estrella Vista Reception Center located at 1471 N. Eliseo C. Felix Jr. Way, Avondale, AZ, 85323, agrees to suspend their liquor license during the hours of 6:00 p.m. to 1:00 a.m. on Sunday, December 31, 2006.

Thank You.

Carmen M. Gonzales
Owner/Operator

C: City of Avondale
Randy D. Nations, Agent

Reception Center
Eliseo Felix Jr. Way & Van Buren
Avondale, AZ 85323
Telephone: 623-932-4455

www.Estrellavistareceptioncenter.com

Sales Office
P.O. Box 81409
Phoenix, AZ 85069-1409
Telephone: 602-997-7959
Fax: 602-997-7644

DEPARTMENTAL REVIEW

	Approve	Disapprove	Date	Name and title	Signature
City Clerk Dept.					
Comments:					
Comm/Recreation					
Comments:					
Community Relations					
Comments:					
Field Operations					
Comments:					
Fire Marshal					
Comments:					
Planning Dept.					
Comments:					
Police Dept.					
Comments:					
Risk Management					
Comments:					

Addendum I

ARIZONA DEPARTMENT OF LIQUOR LICENSES & CONTROL

800 W Washington 5th Floor
Phoenix AZ 85007-2934
(602) 542-5141

400 W Congress #521
Tucson AZ 85701-1352
(520) 628-6595

APPLICATION FOR SPECIAL EVENT LICENSE

Fee = $25.00 per day, for 1-10 day events only
A service fee of $25.00 will be charged for all dishonored checks (A.R.S.§ 44-6852)

PLEASE NOTE: THIS DOCUMENT MUST BE FULLY COMPLETED OR IT WILL BE RETURNED.

DEPT USE ONLY
LIC#

****APPLICATION MUST BE APPROVED BY LOCAL GOVERNMENT**

1. Name of Organization: International Hispanic Network Fellowship Prog.
2. Non-Profit/I.R.S. Tax Exempt Number: 01560127
3. The organization is a: (check one box only)

   ☒ Charitable ☐ Fraternal (must have regular membership and in existence for over 5 years)

   ☐ Civic ☐ Political Party, Ballot Measure, or Campaign Committee

   ☐ Religious

4. What is the purpose of this event? Fundraiser For College Scholarships
5. Location of the event: Estrella Vista Reception Center 1411 N Eliseo C. Felix Jr Way
   Address of physical location (Not P.O. Box) City Avondale County Maricopa Zip 85323

Applicant must be a member of the qualifying organization and authorized by an Officer, Director or Chairperson of the Organization named in Question #1. (Signature required in section #18)

6. **Applicant:** Acevedo (Last) Mike (First) — (Middle) Date of Birth
7. Applicant's Mailing Address: 4125 E. Montecito (Street) Phx (City) AZ (State) 85018 (Zip)
8. Phone Numbers: (623) 932-4455 (Site Owner #) (602) 339 4115 (Applicant's Business #) (602) 955-6230 (Applicant's Home #)
9. Date(s) & Hours of Event: (Remember: you *cannot* sell alcohol before 10:00 a.m. on Sunday)

	Date	Day of Week	Hours from A.M./P.M.	To A.M./P.M.
Day 1:	12/31/06	Sunday	7:00 pm	1:00 AM
Day 2:				
Day 3:				
Day 4:				
Day 5:				
Day 6:				
Day 7:				
Day 8:				
Day 9:				
Day 10:				

Lic 0106 05/2004

***Disabled inividuals requiring special accommodations, please call (602) 542-9027**

10. Has the applicant been convicted of a felony in the past five years, or had a liquor license revoked?
☐ YES ☒ NO (attach explanation if yes)

11. This organization has been issued a special event license for 1 days this year, including this event (not to exceed 10 days per year).

12. Is the organization using the services of a promoter or other person to manage the event? ☒ YES ☐ NO
If yes, attach a copy of the agreement. See attachment

13. List all people and organizations who will receive the proceeds. Account for 100% of the proceeds.
THE ORGANIZATION APPLYING MUST RECEIVE 25% of the gross revenues of Alcoholic Beverage Sales.

Name	Address	Percentage
Intl. Hispanic Network	P.O. Box 97957 Phx 85060	25%
Estrella Vista Reception Center	1971 N. Eliseo C. Felix Jr Way Avondale, AZ	75%

(Attach additional sheet if necessary)

14. Knowledge of Arizona State Liquor Laws Title 4 is important to prevent liquor law violations. If you have any questions regarding the law or this application, please contact the Arizona State Department of Liquor Licenses and Control for assistance.

NOTE: ALL ALCOHOLIC BEVERAGE SALES MUST BE FOR CONSUMPTION AT THE EVENT SITE ONLY.
"NO ALCOHOLIC BEVERAGES SHALL LEAVE SPECIAL EVENT PREMISES."

15. What security and control measures will you take to prevent violations of state liquor laws at this event?
(List type and number of security/police personnel and type of fencing or control barriers if applicable)

____ # Police ☐ Fencing
4 # Security personnel ☐ Barriers

16. Is there an existing liquor license at the location where the special event is being held? ☒ YES ☐ NO
If yes, does the existing business agree to suspend their liquor license during the time period, and in the area in which the special event license will be in use? ☒ YES ☐ NO
(ATTACH COPY OF AGREEMENT)

Estrella Vista Reception Center (623) 932-4455
Name of Business Phone Number

17. Your licensed premises is that area in which you are authorized to sell, dispense, or serve spirituous liquors under the provisions of your license. The following page is to be used to prepare a diagram of your special event licensed premises. Please show dimensions, serving areas, fencing, barricades or other control measures and security positions.

Contractual Agreement
200627

The International Hispanic Network herinafter referred to as IHN enters into a contractual agreement with Salsa y Sabor Productions herinafter referred to as SSP to serve as promoter for the IHN 'Oye Mi Salsa' New Year's dance to be held on December 31, 2006. SSP will perform the following duties as described:

1 SSP will secure a venue for this event by September 1, 2006 and execute all contracts and agreements necessary. Secure payment to venue management according to contract/agreement.

2 SSP will secure musical entertainment for this event by September 1, 2006 and execute all contract and agreements necessary. Secure payment to entertainment provider(s) according to contract/agreement.

3 SSP will be responsible for preparing event flyers and other promotional materials deemed necessary to promote the event. SSP will be responsible for disseminating flyers and promotional materials to gain exposure for this event.

4 SSP will secure the design and printing of tickets for this event.

5 SSP will be responsible for the sale of tickets and collection of ticket sale revenues. Proceeds from ticket sales will be deposited in the IHN designated bank account.

6 SSP will deduct be the cost of items 1, 2, 3 and 4 above from total ticket revenue sales and provide a detailed financial report to the IHN Board of Director's no later than January 31, 2007.

7 SSP will provide the services described in items 1, 2, 3, 4, 5 and 6 at no cost to IHN. Services provided will be in-kind to maximize the profits for the IHN.

This agreement is entered into and approved effective this 7th day of July 2006

International Hispanic Network

Salsa y Sabor Productions

COPY

Estrella Vista Reception Center

1" = 12'

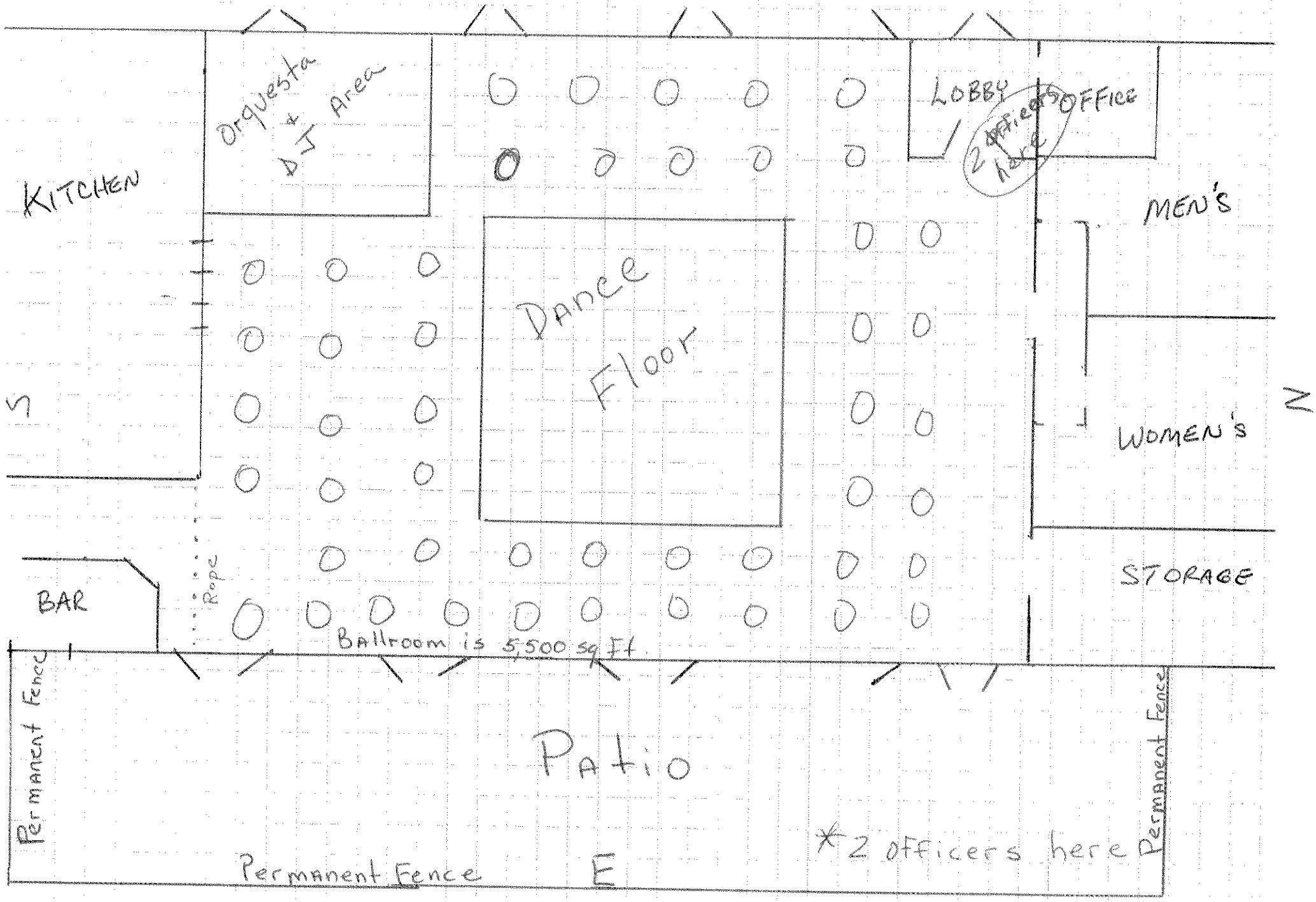

SPECIAL EVENT LICENSED PREMISES DIAGRAM
(This diagram <u>must</u> be completed with this application)

Special Event Diagram: (Show dimensions, serving areas, and label type of enclosure and security positions)
NOTE: Show nearest cross streets, highway, or road if location doesn't have an address.

N↑

THIS SECTION TO BE COMPLETED ONLY BY AN OFFICER, DIRECTOR OR CHAIRPERSON OF THE ORGANIZATION NAMED IN QUESTION #1

18. I, MIKE ACEVEDO, declare that I am an **Officer/Director/Chairperson** appointing the applicant listed in Question 6, to apply on behalf of the foregoing organization for a Special Event Liquor License.

(Print full name)

X _____ BOARD OF DIRECTOR _____ NOV 16, 2006 _____ 602-339-4115

(Signature) (Title/Position) (Date) (Phone #)

KARINA TORRES
NOTARY PUBLIC - ARIZONA
MARICOPA COUNTY
My Comm. Exp. July 26, 2010

State of Arizona County of Maricopa

The foregoing instrument was acknowledged before me this

15 November 2006

Day Month Year

My Commission expires on: July 26, 2010 _____

(Date) (Signature of NOTARY PUBLIC)

THIS SECTION TO BE COMPLETED ONLY BY THE APPLICANT NAMED IN QUESTION #6

19. I, MIKE ACEVEDO, declare that I am the APPLICANT filing this application as listed in Question 6. I have read the application and the contents and all statements are true, correct and complete.

(Print full name)

X _____

(Signature)

KARINA TORRES
NOTARY PUBLIC - ARIZONA
MARICOPA COUNTY
My Comm. Exp. July 26, 2010

State of Arizona County of Maricopa

The foregoing instrument was acknowledged before me this

15 November 2006

Day Month Year

My commission expires on: July 26, 2010 _____

(Date) (Signature of NOTARY PUBLIC)

You must obtain local government approval. City or County *MUST* recommend event & complete item #20. The local city or county jurisdiction may require additional applications to be completed and additional licensing fees before approval may be granted.

LOCAL GOVERNING BODY APPROVAL SECTION

20. I, _____ _____ hereby recommend this special event application

(Government Official) (Title)

on behalf of _____ _____ _____

(City, Town or County) (Signature of OFFICIAL) (Date)

FOR DLLC DEPARTMENT USE ONLY

Department Comment Section:

_____

_____ _____

(Employee) (Date)

☐ APPROVED ☐ DISAPPROVED BY: _____

_____

(Title) (Date)

City of Avondale
CITY CLERK'S OFFICE

DEPARTMENTAL REVIEW FORM

TYPE OF LICENSE:
☒ SPECIAL EVENT LIQUOR LICENSE

ROUTING:
☐ POLICE DEPARTMENT
☒ FIRE DEPARTMENT

APPLICANT'S NAME: MIKE ACEVEDO

ORGANIZATIONS NAME: INTERNATIONAL HISPANIC NETWORK FELLOWSHIP PROGRAM

EVENT ADDRESS: ESTRELLA VISTA RECEPTION CENTER,
1471 NORTH ELISEO FELIX C. JR. WAY

CITY: AVONDALE **STATE:** AZ **ZIP CODE:** 85323

PURPOSE OF EVENT: FUNDRAISER FOR COLLEGE SCHOLARSHIPS

DEPARTMENTAL COMMENTS:
APPLICANT TO COMPLY WITH ALL
FIRE CODE REQUIREMENTS

☒ **APPROVED**
☐ **DENIED**

SIGNATURE

12/11/06
DATE

FIRE MARSHAL
TITLE

THIS LICENSE IS SCHEDULED FOR THE COUNCIL MEETING OF: DECEMBER 18, 2006
PLEASE RETURN YOUR COMMENTS TO THE CITY CLERK'S OFFICE BY: DECEMBER 6, 2006

City of Avondale
CITY CLERK'S OFFICE

DEPARTMENTAL REVIEW FORM

TYPE OF LICENSE:
☒ SPECIAL EVENT LIQUOR LICENSE

ROUTING:
☒ POLICE DEPARTMENT
☐ FIRE DEPARTMENT

APPLICANT'S NAME: MIKE ACEVEDO

ORGANIZATIONS NAME: INTERNATIONAL HISPANIC NETWORK FELLOWSHIP PROGRAM

EVENT ADDRESS: ESTRELLA VISTA RECEPTION CENTER,
1471 NORTH ELISEO FELIX C. JR. WAY

CITY: AVONDALE **STATE:** AZ **ZIP CODE:** 85323

PURPOSE OF EVENT: FUNDRAISER FOR COLLEGE SCHOLARSHIPS

DEPARTMENTAL COMMENTS:

I have reviewed this application and it is approved.

☐ **APPROVED**
☐ **DENIED**

Gary McCarthy
SIGNATURE

12/1/2006
DATE

Lieutenant
TITLE

THIS LICENSE IS SCHEDULED FOR THE COUNCIL MEETING OF: DECEMBER 18, 2006
PLEASE RETURN YOUR COMMENTS TO THE CITY CLERK'S OFFICE BY: DECEMBER 6, 2006

CITY COUNCIL REPORT

SUBJECT:
Amendment No. 1 - Planning and Engineering Services Agreement - AMEC Engineering - Environmental Site Assessment and Site Remediation Report - 4th Street Field Operations Site

MEETING DATE:
December 18, 2006

TO: Mayor and Council

FROM: Carnell Thurman, P.E., City Engineer - (623) 478-3271

THROUGH: Charlie McClendon, City Manager

PURPOSE:

Staff is requesting that the City Council approve Amendment No. 1 to the professional services agreement with AMEC to supervise and document the partial environmental cleanup of the existing landfill at the old 4th Street Field Operations Site, in the amount of $27,000; authorize the transfer of $30,000 from Line Item No. 513-1052-8610 (Sewer Collection Master Plan) to Line Item No. 513-1107-00-8610 (4th Street Lift Station Backup Force Main), and authorize the Mayor or City Manager and City Clerk to execute the necessary documents.

BACKGROUND:

On October 2, 2006, Council approved a professional services contract in the amount of $59,865.49 with AMEC to prepare an Environmental Site Assessment and Remediation Report for the old 4th street field operations site. The scope of work included identifying the limits of the old City landfill, classifying the waste, and developing a mitigation plan to remediate the site.

On January 17, 2006, Council approved a Construction Manager at Risk (CMAR) Pre-Construction Services Agreement with Pierson Construction Corporation (PCC) for the 4th Street Sewer Lift Station Improvements and Backup Force Main Project. During construction of the force main, near the eastern edge of the old 4th street field operations site, PCC discovered the old City landfill. On November 10, 2006 PCC stopped construction and notified City staff of this encroachment. In order to provide a timely resolution to the conflict, staff solicited the expertise of AMEC whom was on site under the previously mentioned contract to evaluate the situation. Staff, AMEC, and PCC, determined that a timely cost-effective resolution to the conflict would be to remove and dispose of the waste material along a 20'wide corridor centered along the force main alignment. Given the proposed depth of the force main, this allows future mitigation of the remaining landfill material without significant impact to the newly installed force main.

DISCUSSION:

To perform the removal and disposal of the waste material, PCC will need supervision from an environmental specialist to direct and document the excavation and disposal operations. Staff recommends, due to time constraints, that AMEC Engineering perform oversight related to the removal and disposal of waste material. This effort also allows for partial mitigation to be combined with the remaining landfill mitigation at a later date, and to be submitted to the EPA for closeout.

Staff negotiated rates with AMEC and recommends paying out this amendment based on time and materials. The overall costs of the additional work will not exceed $27,000. Staff will monitor the operation to insure that the contractor and the environmental specialist work as efficiently as possible.

SCHEDULE:

The additional work outside the original scope will not affect the delivery schedule for the work already covered under this contract. AMEC agreed to provide their services immediately.

BUDGETARY IMPACT:

Upon approval, funds will be transferred in the amount of $30,000 from Line Item No. 513-1052-8610 to Line Item No. 513-1107-00-8610.

RECOMENDATION:

Staff recommends that Council approve Amendment No. 1 to the professional services agreement with AMEC to supervise and document the partial environmental cleanup of the existing landfill at the old 4th Street City Field Operations Site, in the amount of $27,000; authorize the transfer of $30,000 from Line Item No. 513-1052-8610 (Sewer Collection Master Plan) to Fund Item No. 513-1107-00-8610 (4th Street Lift Station Backup Force Main), and authorize the Mayor or City Manager and City Clerk to execute the necessary documents.

ATTACHMENTS:

Click to download

- Vicinity Map
- PSA - AMEC First Amendment

VICINITY MAP

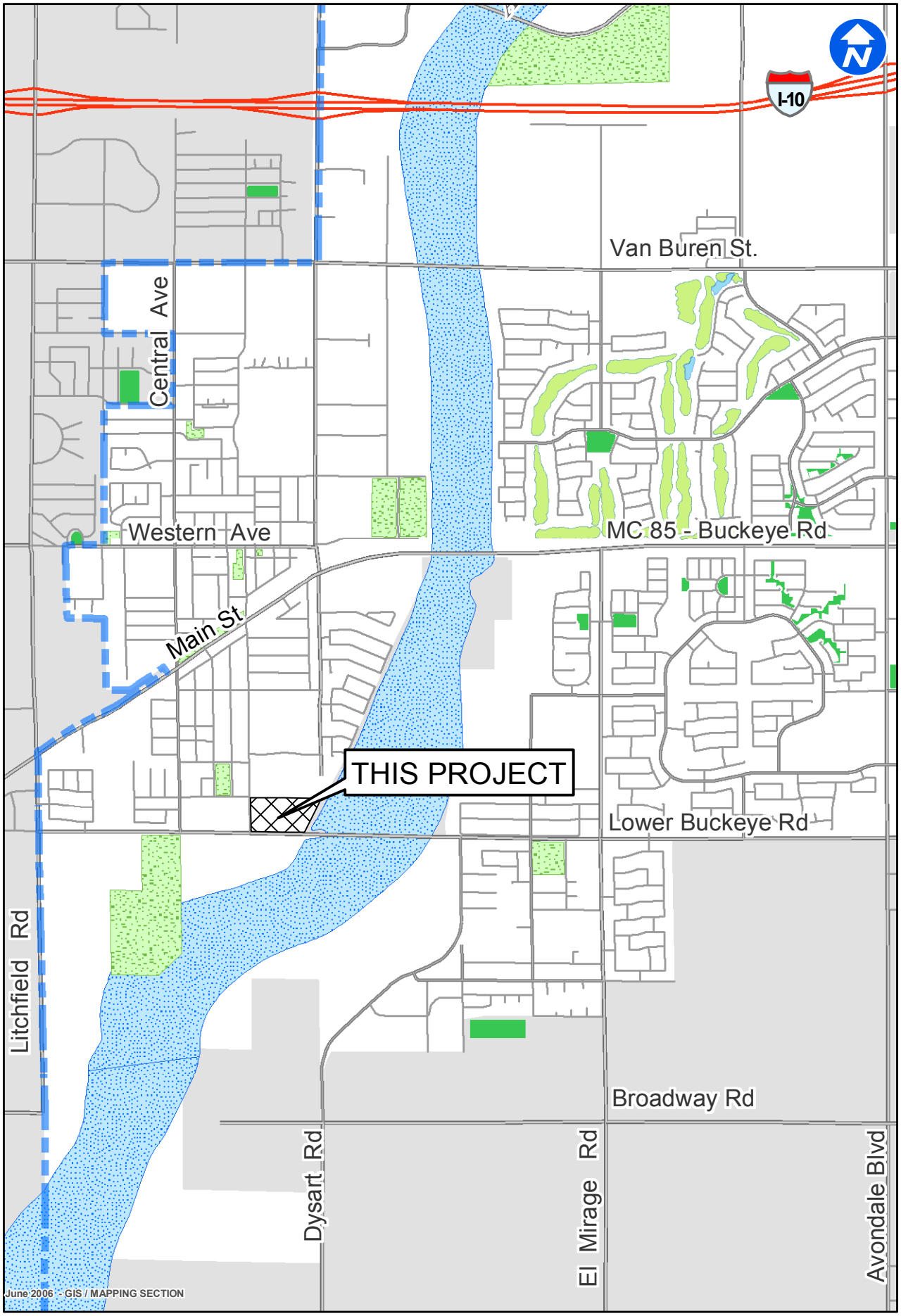

CITY OF AVONDALE

FIRST AMENDMENT
TO
PROFESSIONAL SERVICES AGREEMENT
BETWEEN
THE CITY OF AVONDALE
AND
AMEC EARTH & ENVIRONMENTAL, INC.

THIS FIRST AMENDMENT TO PROFESSIONAL SERVICES AGREEMENT (this "First Amendment") is made as of December 18, 2006, between the City of Avondale, an Arizona municipal corporation (the "City") and AMEC Earth & Environmental, Inc., a Nevada corporation (the "Consultant").

RECITALS

A. The City and the Consultant entered into that certain Professional Services Agreement dated October 2, 2006, for a Phase I Environmental Site Assessment, an Asbestos Survey and a Landfill Investigation (the "Agreement").

B. The City has determined that additional services by the Consultant are necessary to supervise the environmental cleanup of the project (the "Additional Services").

C. The City and the Consultant desire to amend the Contract to provide for the Additional Services.

AGREEMENT

NOW, THEREFORE, in consideration of the foregoing recitals, which are incorporated herein by reference, and the following mutual covenants and conditions, the City and the Consultant hereby agree to amend the Agreement as follows:

1. Scope of Work. The Consultant shall provide the Additional Services as set forth in the Scope of Work, attached hereto as Exhibit A and incorporated herein by reference.

2. Compensation. The Consultant's total compensation under the Agreement shall be increased by no more than $27,000.00 as consideration for the Additional Services as set forth in the attached Exhibit A.

3. Effect of Amendment. In all other respects, the Agreement is affirmed and ratified and, except as expressly modified herein, all terms and conditions of the Agreement shall remain in full force and effect.

4. Non-Default. By executing this First Amendment, the Consultant affirmatively asserts that the City is not currently in default, nor has been in default at any time prior to this First Amendment, under any of the terms or conditions of the Agreement.

5. Conflict of Interest. This First Amendment may be cancelled pursuant to ARIZ. REV. STAT. § 38-511.

IN WITNESS WHEREOF, the parties hereto have executed this instrument as of the date and year first set forth above.

"**City**"

CITY OF AVONDALE, an Arizona municipal corporation

_____
Charles P. McClendon, City Manager

ATTEST:

_____
Linda M. Farris, City Clerk

"**Contractor**"

AMEC EARTH & ENVIRONMENTAL INC., a Nevada corporation

By:_____

Name:_____

Its:_____

(ACKNOWLEDGEMENTS)

STATE OF ARIZONA)
) ss.
COUNTY OF MARICOPA)

This instrument was acknowledged before me on _____, 2006, by Charles P. McClendon, the City Manager of the CITY OF AVONDALE, an Arizona municipal corporation, on behalf of the City of Avondale.

_____
Notary Public in and for the State of Arizona

My Commission Expires:

_____

STATE OF ARIZONA)
) ss.
COUNTY OF MARICOPA)

This instrument was acknowledged before me on _____, 2006, by _____ as _____ of AMEC Earth & Environmental, Inc., a Nevada corporation, on behalf of the corporation.

_____
Notary Public in and for the State of Arizona

My Commission Expires:

_____

EXHIBIT A
TO
FIRST AMENDMENT
TO
PROFESSIONAL SERVICES AGREEMENT
BETWEEN
THE CITY OF AVONDALE
AND
AMEC EARTH & ENVIRONMENTAL, INC.

[Scope of Work]

See following pages.

November 20, 2006
AMEC Proposal No. PV06-11-06

City of Avondale
11465 West Civic Center Drive
Avondale, Arizona 85323

Attn: Paul Lopez

Re: Proposed Scope of Work
Waste Removal Observation Services
City of Avondale

Per your request, AMEC Earth & Environmental, Inc. (AMEC) is pleased to submit this proposal to provide waste removal observation services associated with a sewer pipeline construction project located along the southern boundary of the former City of Avondale 4th Street Maintenance Yard (Site), parallel to Lower Buckeye Road. Waste associated with a former landfill was encountered by Standard Construction Company, a subcontractor to Pierson Construction who is contracted to install a sewer pipeline and lift station for the City of Avondale. The sewer pipeline construction project is located along the southern boundary of a former landfill that was operated by the City of Avondale. AMEC is currently performing investigation services to evaluate the entire landfill under a separate contract.

In order to minimize delay in the sewer pipeline construction project, it is our understanding that the City has instructed its contractor, Pierson Construction, to excavate and properly dispose of the waste material encountered in the area of the proposed sewer. Further, the City has requested AMEC's assistance with characterizing the excavated waste for disposal, providing observation documentation and monitoring services during the excavation, and confirmational sampling.

The following presents our proposed scope of services and estimated costs.

Health and Safety

AMEC has a long history of conducting environmental and engineering services under the umbrella of a comprehensive and effective health and safety program. AMEC has established a company-wide health and safety program that accommodates the need for specific provisions according to individual site conditions and circumstances on operation. Prior to starting fieldwork, AMEC will prepare a site-specific health and safety plan to address anticipated site issues.

AMEC Earth & Environmental, Inc.
1405 West Auto Drive
Tempe, Arizona 85284-1016
Tel (480) 940-2320
Fax (480) 785-0970 www.amec.com

The Health and Safety Plan will include the following:

- Background information about the site and scope of work objectives.
- A hazard assessment, including physical and chemical exposure potentials and hazards associated with the work.
- Safety procedures including site monitoring, personal protective equipment, and site control measures.
- Decontamination procedures for personnel and equipment.
- Emergency response procedures (action levels requiring work stoppage, medical emergency procedures).

AMEC's selected Project Manager, Justin Boreson will be responsible for Health and Safety issues related to the project. In particular, he will be responsible for preparation and administration of the health and safety plan. All individuals will have health and safety responsibilities, including implementation and monitoring of the health and safety plan in the field.

Due to the potential to encounter hazardous materials and in order for AMEC to perform the work, we strongly suggest that the excavation contractor be 40-hour Occupational Health and Safety Administration (OSHA) Hazardous Waste Operations and Emergency Response (HazWOPER) in accordance with 29 CFS 1910.120 (a) – (q) trained and certified. AMEC will not contractually be responsible for the health and safety of the excavation contractor, however, we strongly suggest that they development and implement a site specific health and safety plan for the execution of their services.

Waste Characterization

AMEC initially will collect two composite samples of the waste material excavated from two test pit excavations. Samples will be collected from the backhoe bucket as AMEC employees will not enter the excavation. The purpose of the sampling will be two-fold. The samples will be used to provide the construction contractor with general waste characterization information necessary for waste disposal documentation. In addition, the analytical data will also be used to evaluate whether the soil matrix material is acceptable, in regards to potential contamination, for backfill based upon a comparison to the Arizona Residential Soil Remediation Levels (SRLs). Soils with concentrations exceeding Residential SRLs will not be considered acceptable. AMEC's proposal does not include evaluation of the material for geotechnical or construction suitability. AMEC will not be providing any geotechnical documentation for this project.

The waste characterization samples will be analyzed at a rush turn around time (TAT) for the following parameters: Volatile Organic Compounds (VOCs) by US Environmental Protection Agency (USEPA) Standard Method 8260; Polynuclear Aromatic Hydrocarbons (PAHs) by USEPA Standard Method 8310; Pesticides and Polychlorinated Bi-phenols (PCBs) by USEPA Standard Methods 8081/8082; Chlorinated Herbicides by USEPA Standard Method 8151; Total Resource Conservation and Recovery Act (RCRA) metals (8 metals) by USEPA Standard Methods 6010B/7471A; and Hydrocarbons (HC) by Arizona Department of Health Services (ADHS) Standard Method 8015AZR1.

Observation Documentation

During the waste excavation activities to be performed by the construction contractor or its subcontractor, an AMEC professional will be on-site to visually observe and field screen the material for the potential presence of landfill gases (specifically methane) using a LandTec GEM-2000 landfill gas meter and volatile organic compounds (VOCs) using a MiniRae photoionization detector. In addition, AMEC will document the types and relative quantities of waste encountered. If methane gas is measured above 5 percent, by volume of air (lower explosive limit for methane), or if VOCs are detected above 5 parts per million (ppm), and/or if AMEC visually observes the presence of any suspect hazardous materials/waste, AMEC will notify the City immediately. In addition to keeping a daily written log of the excavation details, waste materials and excavation activities will be photographically documented daily.

Confirmation Sampling

AMEC will collect approximately 5 samples from the base of the excavation (at approximately 60-foot intervals along the length of the exaction) prior to backfill to assess if underlying soils have been impacted. The soils will be analyzed in accordance with the same methods described above for waste characterization.

Documentation Report

AMEC will prepare a letter report upon completion of the excavation and receipt of the disposal documentation. The report will include a photographic summary and written documentation of the types of waste encountered, an estimate of the quantity of material removed, excavation dimension details, and waste disposal documentation. Wastes encountered during the excavation (i.e., depth and type of materials) will be shown graphically in a plan view map.

Although this letter report will be stand alone, this information likely will be incorporated and/or used in conjunction with the report that AMEC will be preparing as part of our current assessment of the entire landfill area.

Cost Estimate

Services	Unit	Quantity	Rate	Amount
Program Manager	Hours	5	$160.00	$800.00
Project Manager	Hours	20	$100.00	$2000.00
Field Supervisor	Hours	100	$85.00	$8,500.00
Staff Geologist/Engineer	Hours	10	$95.00	$950.00
Administrative Support	Hours	5	$45.00	$225.00
GIS/CADD	Hours	5	$75.00	$375.00
Report Processing/Expenses/Travel	Lump Sum	1	$600.00	$600.00
Analytical – Rush TAT	Each	3	$600.00	$1,800.00
Analytical – Standard TAT	Each	5	$500.00	$2,500.00
Field Equipment	Day	14	$150.00	$2,100.00
Total Cost Estimate				**$19,850.00**

Cost Assumptions

The above cost estimate is based upon an estimated duration of time for excavation that Pierson Construction provided to AMEC. Field observation hours may vary depending upon a number of different factors, including:

- Whether the waste is screened and the soil is backfilled into the excavation or if all excavated waste is disposed and clean soil is imported.
- Extensive standby, not associated with AMEC.

This scope of work is limited only to the area where the sewer line must be installed along the southern boundary of the Site (approximately 350 linear feet).

The cost for the services performed under this proposal will be at a time and materials basis with a not be exceed value without prior consent of the City.

We appreciate the opportunity to propose to you for these services. Authorization can be granted by issuance of a contract and notice to proceed in accordance with City of Avondale procurement procedures.

Should you have any questions, please contact us at (480) 940-2320.

Respectfully submitted,

AMEC Earth & Environmental, Inc.

Julianne M. Hamilton, P.G.
Client Service Manager

G:\Environmental-Development\2006 Proposals\PV06-11-06 Avondale-Landfill Excavation Observation\PV06-11-06.doc

CITY COUNCIL REPORT

SUBJECT:
Amendment No. 3 - Construction Manager at Risk Agreement - Pierson Construction - 4th Street Wastewater Lift Station Improvements and Backup Force Main Project

MEETING DATE:
December 18, 2006

TO: Mayor and Council

FROM: Rob Emmett

THROUGH: Charlie McClendon, City Manager

PURPOSE:

Staff is requesting that the City Council approve Amendment No. 3 to the Construction Manager at Risk Agreement with Pierson Construction Corporation for the 4th Street Wastewater Lift Station Improvements and Backup Force Main Project in the amount of $500,000 with the work to be performed on a Time and Material Basis for a total contract amount of $3,851,218 and authorize the Mayor or City Manager and City Clerk to execute the necessary documents.

BACKGROUND:

On October 2, 2006, the City Council approved a professional services agreement with AMEC Earth & Environmental for a contract amount of $59,865.49 to prepare an Environmental Assessment and Remediation Report for the old 4th Street City landfill located to the northeast of the Lower Buckeye Road and South 4th Avenue intersection (the old public works yard). AMEC's scope of services included identifying the limits of the old landfill, classifying the waste, and developing a mitigation plan to remediate the site.

On November 10, 2006 Pierson Construction Corporation encountered the landfill while excavating the trench for the back-up force main for the 4th Street Wastewater Lift Station. All work on the force main installation was halted and the Engineering Department requested that AMEC evaluate and classify the buried refuse in the force main alignment. AMEC's initial evaluation was within the scope of service under their existing contract. Their initial evaluation resulted in the conclusion that the encountered refuse is domestic and construction solid waste with no indication of hazardous materials or excessive landfill gases. However, by engineering standards it is unacceptable to have solid waste or deleterious material as part of the foundation or construction platform for a piping system. Therefore, the solid waste must be removed or excavated down to native material or undisturbed soil. With the completion of the solid waste excavation, clean fill will be transported to the site, mixed with the salvaged soil from the excavation, and compacted in place to re-establish the grade for the pipeline project.

DISCUSSION:

Based on AMEC's initial evaluation and the need for a timely, cost effective resolution, a plan to excavate the solid waste and re-establish a compacted foundation was formulated between the Engineering Department, the Water Resources Department, Pierson Construction, and Rothberg, Tamburini, and Winsor Inc., design engineer for the back-up force main and the lift station. The partners agreed that the solid waste should be removed along a 20-foot wide corridor centered on the force main alignment and down to the bottom of the solid waste or undisturbed soil. The depth of excavation is estimated at 15 feet. The excavated spoils,

consisting of the solid waste and encapsulating soil, will be screened to separate the solid waste from the soil. The solid waste will be transported to a landfill. The salvaged soil would then be mixed with clean fill and compacted back into the excavation. Additionally, a portion of the newly installed force main that crosses Lower Buckeye Road will be removed and then re-installed because solid waste was found, during subsequent excavation, to be under the pipeline. Because the work cannot be definitively defined, the work required to remove the solid waste and re-establish grade will be performed on a time and material basis.

Based on the above plan, Pierson Construction submitted a proposal to complete the remediation of the solid waste. Based on the assumptions of excavation depth and volume of solid waste the estimated cost of remediation is $500,000.

BUDGETARY IMPACT:

Staff is recommending the transfer of $500,000 from the Sewer Development Fund, Sewer Buy-in/Developer Reimbursement, 513-1001-00-8610, to the Sewer Development Fund, 4th Street Lift Station Backup Force Main, 513-1107-00-8610.

RECOMENDATION:

Staff recommends that the City Council approve Amendment No. 3 to the Construction Manager at Risk Agreement with Pierson Construction Corporation for the 4th Street Wastewater Lift Station Improvements and Backup Force Main Project in the amount of $500,000 with the work to be performed on a Time and Material Basis for a total contract amount of $3,851,218 and authorize the Mayor or City Manager and City Clerk to execute the necessary documents.

ATTACHMENTS:

Click to download

- Vicinity Map
- CMAR - Third Amend

VICINITY MAP

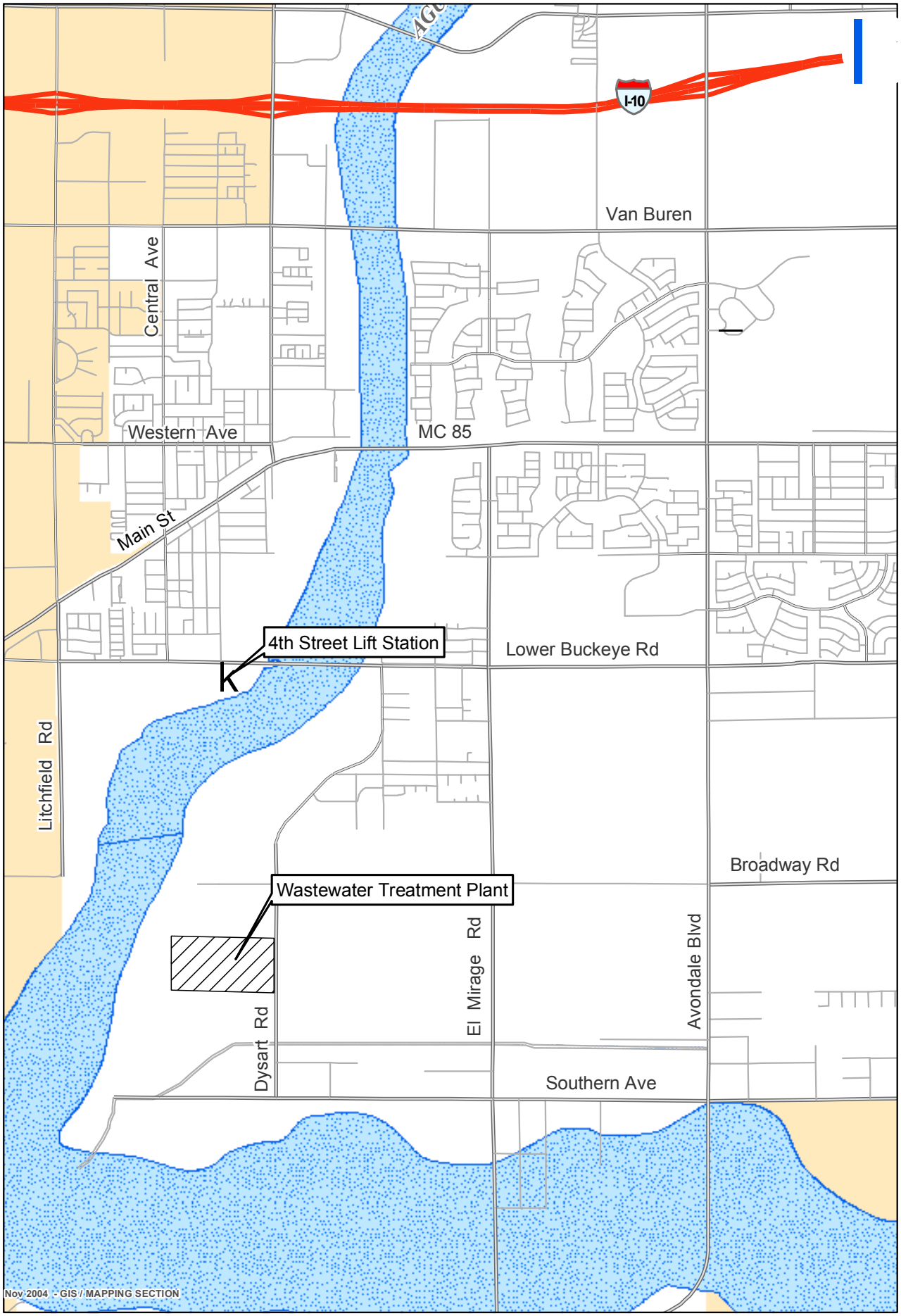

CITY OF AVONDALE

4th Street Wastewater Liftstation Evaluation

THIRD AMENDMENT
TO
CONSTRUCTION MANAGER AT RISK AGREEMENT
BETWEEN
THE CITY OF AVONDALE
AND
PIERSON CONSTRUCTION CORPORATION

THIS THIRD AMENDMENT TO CONSTRUCTION MANAGER AT RISK AGREEMENT (this "Third Amendment") is made as of December 18, 2006, between the City of Avondale, an Arizona municipal corporation (the "City") and Pierson Construction Corporation, an Arizona corporation (the "Construction Manager").

RECITALS:

A. The City and the Construction Manager entered into that certain Construction Manager At Risk Agreement, dated January 15, 2005, for final design and complete construction services for (i) modifications to the City's 4th Street Lift Station and (ii) a new force main from the 4th Street Lift Station to 127th Avenue (the "Initial Agreement").

B. The Initial Agreement was amended twice, on August 7, 2006, to include the Force Main GMP (the "First Amendment") and on August 21, 2006, to include the Lift Station GMP (the "Second Amendment"). The Initial Agreement, the First Amendment and the Second Amendment are collectively referred to herein as the "Agreement." Unless otherwise set forth herein, all capitalized terms used in this Third Amendment shall have the meanings ascribed to them in the Agreement.

C. During construction of the Force Main portion of the Project, the City and the Construction Manager discovered that a portion of an old landfill extended into the Project area, requiring remediation of the landfill material lying within the alignment of the Force Main.

D. In accordance with Section 3.8 of the Initial Agreement, the Construction Manager has submitted, and the City has approved, a proposal and scope of work for removing the landfill materials (the "Additional Services Scope"), as set forth in Exhibit 1, attached hereto and incorporated herein by reference. Accordingly, the City and the Construction Manager desire to increase the Force Main GMP by $500,000.00 and extend the date of substantial completion for construction of the Force Main Improvements phase of the Project by one week.

AGREEMENT:

NOW, THEREFORE, in consideration of the foregoing recitals, which are incorporated herein by reference, other such good and valuable consideration, the receipt and sufficiency of which are hereby acknowledged, and the promises and covenants set forth below, the City and the Construction Manager hereby agree as follows:

1. The Construction Manager's guaranteed maximum price for the Force Main Improvements portion of the Work (the "Force Main"), including the Cost of the Work as defined in Article 8 of the Agreement and the Construction Phase Fee as set forth in subsection 7.2(B) of the Agreement, but specifically not including the Pre-Construction Phase Fee set forth in subsection 7.1(B) of the Agreement, is hereby agreed to be $1,108,768.89. The Force Main GMP is the total compensation from the City to the Construction Manager for its fee and for the performance of the Force Main Work in accordance with Contract Documents set forth in the Agreement and the Additional Services Scope.

2. The date of Substantial Completion of the Force Main Work is hereby extended to April 18, 2007.

3. In all other respects, the Agreement is affirmed and ratified and, except as expressly modified herein, all terms and conditions of the Agreement shall remain in full force and effect.

IN WITNESS WHEREOF, the parties hereto have executed this Agreement as of the date and year first written above.

"**City**"

CITY OF AVONDALE, an Arizona municipal corporation

_____
Charles P. McClendon, City Manager

ATTEST:

_____
Linda M. Farris, City Clerk

"**Construction Manager**"

PIERSON CONSTRUCTION CORP., an Arizona corporation

By:_____

Name:_____

Its:_____

(ACKNOWLEDGMENTS)

STATE OF ARIZONA)
) ss.
COUNTY OF MARICOPA)

This instrument was acknowledged before me on _____, 2006, by Charles P. McClendon, the City Manager of the CITY OF AVONDALE, an Arizona municipal corporation, on behalf of the City of Avondale.

_____

Notary Public in and for the State of Arizona

My Commission Expires:

_____

STATE OF _____)
) ss.
COUNTY OF _____)

This instrument was acknowledged before me on _____, 2006, by _____, the _____ of PIERSON CONSTRUCTION CORPORATION, an Arizona corporation, on behalf of the corporation.

_____

Notary Public in and for the State of _____

My Commission Expires:

_____

EXHIBIT 1
TO
SECOND AMENDMENT
TO
CONSTRUCTION MANAGER AT RISK AGREEMENT
BETWEEN
THE CITY OF AVONDALE
AND
PIERSON CONSTRUCTION CORPORATION

[Additional Services Scope]

See following pages.

Pierson Costruction Corporation

222 S. 52 nd Street
Tempe, AZ 85281
Attn: Mr. Robert Emmett - Director Utilities Department
Phone: 623-478-3377
Fax: 623-478-3836

Quote To:	City of Avondale	Job Name:	Landfill Project
Address:	1211 South 4th Street	Address:	Old Maintenance Facility
City:	Avondale	City:	Avondale
State:	AZ	State:	AZ

ITEM	DESCRIPTION	QUANTITY	UNIT	UNIT PRICE	AMOUNT
10	EXCAVATE LANDFILL	3,750.00	CY	8.00	30,000.00
20	HAUL OFF TO LANDFILL	3,750.00	CY	96.00	360,000.00
30	IMPORT BACKFILL FROM MATERIAL STOCKPILE	1,875.00	CY	18.00	33,750.00
35	BUY BACKFILL	1,875.00	CY	19.00	35,625.00
40	INSTALL 16" FORCE MAIN	450.00	LF	64.00	28,800.00
50	TEST FORCE MAIN 2 SEGMENT	700.00	LF	2.50	1,750.00
60	LANDFILL DELAY STANDARD	1.00	LS	5,500.00	5,500.00
70	STANDARD TEST FORCE MAIN EXTRA SEGMENTS	1.00	LS	4,575.00	4,575.00
GRAND TOTAL					**$500,000.00**

NOTES:

This bid is an estimate only of labor, equipment, material and fees to remove approximately 3,750 cubic yards of old landfill material from the Avondale Project and haul it to an approved landfill. This estimate will be executed on a Time and Material basis and the costs are designed to encounter funding only.

Quantities are approximate and final payment is to be based on a Time and material basis as allowed in MAG specifications.

SCOPE:

Start Date: 12/4/2006

Go East to West as per the attached drawing.

The following excavation limits have been established - 20' wide and 15' deep.

AMEC will field confirm our excavation depth for this remediation.

AMEC will recommend if necessary the proper safety equipment.

All material removed from the excavated area will pass through our screening system to remove the buried materials.

All screened dirt will be compacted back in the trench and tested. Go 3' above invert of force main, retrench and install force main, then recommence with backfill trench.

AMEC will instruct Pierson Construction Corporation as to the type of material (Hazardous - Non-Hazardous) and direction to the proper format and requirements needed to dispose of this material according to the governing rules and regulation of Arizona.

Remove and reinstall light poles identified by the City of Avondale

Provide survey limits and as-built drawings of excavated area

No batteries, tires, hazardous material

SCHEDULE:

Start Date: 12/4/2006

Estimated Duration: 3 weeks

Respectfully submitted,
Pierson Construction Corporation

Steve Kessler - Project Manager
Date: 12-5-06

Accepted By:

Company:

Date:

CITY COUNCIL REPORT

SUBJECT:
Amendment No. 4 to the Contract with Synagro West, Inc., for Dewatered Sludge Hauling and Disposal

MEETING DATE:
December 18, 2006

TO: Mayor and Council

FROM: Allison Sears

THROUGH: Charlie McClendon, City Manager

PURPOSE:

Staff is requesting that the City Council approve Amendment No. 4 for a one-year extension to the existing Dewatered Sludge Hauling and Disposal contract with Synagro West, Inc., and authorize the Mayor or City Manager and the City Clerk to execute the necessary documents.

BACKGROUND:

On October 21, 2002, Council awarded a contract to Synagro West, Inc., (Synagro) for the hauling and disposal of dewatered sludge, an end product of the City's wastewater treatment process. In January 2004, Amendment No. 1 was approved, providing a contract cost for subsurface incorporation and operational considerations. In June 2005, Amendment No. 2 was approved, providing for the unforeseen cost increase of diesel fuel. In October 2005, Amendment No. 3 provided for a one-year extension of the contract and the inclusion of a fuel surcharge rate structure. Proposed Amendment No. 4 provides for the last one year extension of the contract. Because of the changing biosolids handling practices caused by the planned improvements at the Water Reclamation Facility (WRF), the biosolids will be hauled to the Southwest regional landfill during this last year contract extension.

DISCUSSION:

Since October 2002, Synagro has provided the wastewater treatment plant with hauling and disposal services for dewatered sludge. The term of the original contract was three years with two one-year extension options. Throughout the existing three-year contract, staff has been extremely satisfied with the quality of services provided by Synagro, and asked that they submit a rate proposal for the second of the two one-year extension options.

On an annual basis, the wastewater treatment plant produces about 6,200 wet tons of dewatered sludge. Under the proposed pricing structure, $49 per wet ton includes the cost for hauling and tipping fees at the landfill during the one-year contract extension would be about $303,800.

In addition, Synagro submitted the proposed fuel surcharge rate structure shown in Table 1. The fuel surcharge will not apply to the $21 per wet ton tipping fee at the landfill. No fuel surcharges apply for diesel costs below $2.60/gallon. If diesel costs rise above that, the surcharge structure will be applied as shown below. Recent charges have been in the 2% range. If surcharge rates consistently remain between 2%-6% during the one-year contract, the additional contract costs will range from about $3,472 to $10,416. Using these assumptions, the total one-year contract extension cost for sludge hauling, including the proposed fuel surcharge, would range from $307,272 to $314,216.

TABLE 1

Fuel Rate [1]	Fuel Surcharge %

< $2.599	0%
$2.60 - $2.649	1%
$2.65 - $2.699	2%
$2.70 - $2.749	3%
$2.75 - $2.799	4%
$2.80 - $2.849	5%
$2.85 - $2.899	6%
$2.90 - $2.949	7%
$2.95 - $2.999	8%
$3.00 - $3.049	9%
$3.05 - $3.099	10%
Note 1 – Fuel Rate based on DOE EIA weekly retail on-highway diesel prices (West) as found at http://tonto.eia.doe.gov/oog/info/wohdp/diesel.asp. At $3.10 and above, same fuel surcharge % increase process applies.	

BUDGETARY IMPACT:

Funding for this contract amendment is provided within the "Other Professional Services" (503-9230-00-6180) line item of the Wastewater Operations Budget.

RECOMENDATION:

Staff recommends that the City Council approve Amendment No. 3 for a one-year extension to the existing Dewatered Sludge Hauling and Disposal contract with Synagro West, Inc., and authorize the Mayor or City Manager and the City Clerk to execute the necessary documents.

ATTACHMENTS:

Click to download

- Synagro West

SYNAGRO

A Residuals Management Company

Mr. James Garner
City of Avondale
4800 S. Dysart Road
Avondale, AZ 85323

November 15, 2006

RE: Proposal to Extend Biosolids Services contract from October 21, 2002 with Synagro West, Inc., (Synagro) for one year

Dear Mr. Garner,

Synagro of California, LLC. (Synagro) has been providing superior biosolids hauling and beneficial reuse services to the City of Avondale since 2002 and welcomes the opportunity to continue providing uninterrupted service. We apologize for the delay in the submission of this proposal, however as discussed, we have been hampered by the variable status of the current biosolids handling practice of agricultural land application.

Confirming our meeting on October 30th and in consideration of the projection that Avondale's biosolids will be considered Sub Class B over much of the next year, Synagro has secured air-space for disposal at Southwest Regional Landfill. The fuel protection program will remain consistent with our existing service agreement based on a $28.00 per ton benchmark for transportation costs.

Cost for Proposed Services:

1. Synagro will transport via sub contractor, Avondale's biosolids in roll-off bins to Southwest Regional Landfill for disposal on a scheduled basis-$49.00 per wet ton.

Synagro agrees to be bound by the terms and conditions of the agreement set fourth above. If in agreement, please authorize below or include a purchase order number for the continuation of services. Should you have any questions regarding this submittal, please contact Craig Geyer or myself. Thank you in advance for your continued business.

Sincerely,

Chris Salerno

Chris Salerno
Area Sales Manager SoCal / AZ
562-682-6634

City of Avondale Authorized Signature & Date

_____

PO # _____

CC: Craig Geyer, Sam Monaco, John Pugliaresi

City of Avondale – Fuel Protection Program

Monthly Invoice shall be adjusted for a Fuel Surcharge, in accordance with the table below, if the cost of retail on-highway diesel fuel (Department of Energy, Energy Information Administration - West) is at, or exceeds, $2.60 per gallon.

The Fuel Surcharge percentage is as follows and may adjust the $28.00 transportation base rate as noted in the extension proposal and consistent with the existing service agreement:

Fuel Rate[1]	Fuel Surcharge %
< $2.599	0 %
$2.60 - $2.649	1 %
$2.65 - $2.699	2 %
$2.70 - $2.749	3 %
$2.75 - $2.799	4 %
$2.80 - $2.849	5 %
$2.85 - $2.899	6 %
$2.90 - $2.949	7 %
$2.95 - $2.999	8 %
$3.00 - $3.049	9 %
$3.05 - $3.099	10 %

Note 1 – Fuel Rate based on DOE EIA weekly retail on-highway diesel prices (West) as found at http://tonto.eia.doe.gov/oog/info/wohdp/diesel.asp. At $3.10 and above, same fuel surcharge % increase process applies.

Synagro of California, LLC
5615 South 91st Avenue, Tolleson, AZ 85353 • Phone: (623) 936-6328 • Fax: (623) 936-6418

CITY COUNCIL REPORT

SUBJECT:
Professional Services Agreement - Design and Construction Management - Carollo Engineers - Van Buren Water Main, 101st to 105th Avenue and Emergency Connection

MEETING DATE:
December 18, 2006

TO: Mayor and Council

FROM: Rob Emmett

THROUGH: Charlie McClendon, City Manager

PURPOSE:

Staff is requesting that the City Council approve a Professional Services Agreement for Design and Construction Management services with Carollo Engineers for the Van Buren Water Main, 101st to 105th Avenue and Emergency Connection the in an amount not to exceed $149,978 and authorize the Mayor or City Manager and City Clerk to execute the necessary documents.

BACKGROUND:

The 2005 Water Master Plan recommends the installation of a 16-inch water main between 101st and 105th Avenues by the year 2010. However, this project needs to be accelerated because of the commercial development at the northwest corner of the Van Buren Street and 99th Avenue intersection. The planned commercial buildings consist of flex space with one of the buildings slated for warehousing with high stack storage. Because of the intended uses and the building construction type, the required fire flow cannot be met by the existing distribution system. Therefore, to ensure adequate water flows for fire suppression, the Van Buren water main installation needs to be accelerated.

Additionally, mitigation strategies from the impacts of the 11-year drought have included discussions with adjacent water providers on the possibility of developing connections between water systems for emergency use. To date, staff has discussed the concept with the Cities of Tolleson and Goodyear and both are agreeable to developing emergency connections. With the possible acceleration of the installation of the Van Buren water main between 101st and 105th Avenues, an immediate opportunity exists with Tolleson to develop an emergency connection because of a shared municipal boundary and the existence of a Tolleson water main within the southern portion of the Van Buren Street right-of-way. When notified of the City's plan and the possibility of installing an emergency connection, Tolleson staff was agreeable to proceeding. At a later date, an intergovernmental agreement will be developed to define the function and operation of the emergency connection.

DISCUSSION:

Using the 2006-2007 Professional Consultant Services Pre-Qualification List and conforming to the policies of the City's Procurement Policy, a three member selection committee evaluated the statements of qualifications from firms with expertise in the design of water distribution systems. Dibble & Associates, Carollo Engineers, and Entellus were selected as the three most qualified firms to perform the work. The selection committee ranked the firms based on the criteria of experience, qualifications, and previous performance and selected Carollo Engineers as the best qualified firm. Not only does Carollo exhibit superior credentials in performing

water distribution design, the firm is familiar with the City's water distribution system and maintains the City's computerized hydraulic model.

A scope of services and a contract fee was negotiated with Carollo Engineers. The scope of services consists of the following work tasks:

- Field Survey, geotechnical investigation, and potholing
- Utility review and coordination
- Permits and agency approvals
- Detailed design
    - Water main
    - Emergency water system connection
- Bidding and construction phasing services
- Project management

The contract fee for the design and construction management is $149,978.

BUDGETARY IMPACT:

Staff is recommending the reallocation of $150,000 from the Water Development Fund, WA1153, 127th Avenue, Lower Buckeye Road to Dysart Road, Water Development Fund, 514-1153-00-8520 and the establishment of a line item in the Water Development Fund for the Van Buren Water Main, 101st to 105th Avenue and Emergency Connection. A request to re-program the 127th Avenue project will be presented in the upcoming CIP budget process and the request will coincide with the 127th Avenue roadway reconstruction project programmed in FY2009-2010.

RECOMENDATION:

Staff recommends that the City Council approve a Professional Services Agreement for Design and Construction Management services with Carollo Engineers for the Van Buren Water Main, 101st to 105th Avenue and Emergency Connection the in an amount not to exceed $149,978 and authorize the Mayor or City Manager and City Clerk to execute the necessary documents.

ATTACHMENTS:

Click to download

- Vicinity Map
- PSA Carollo

City of Avondale

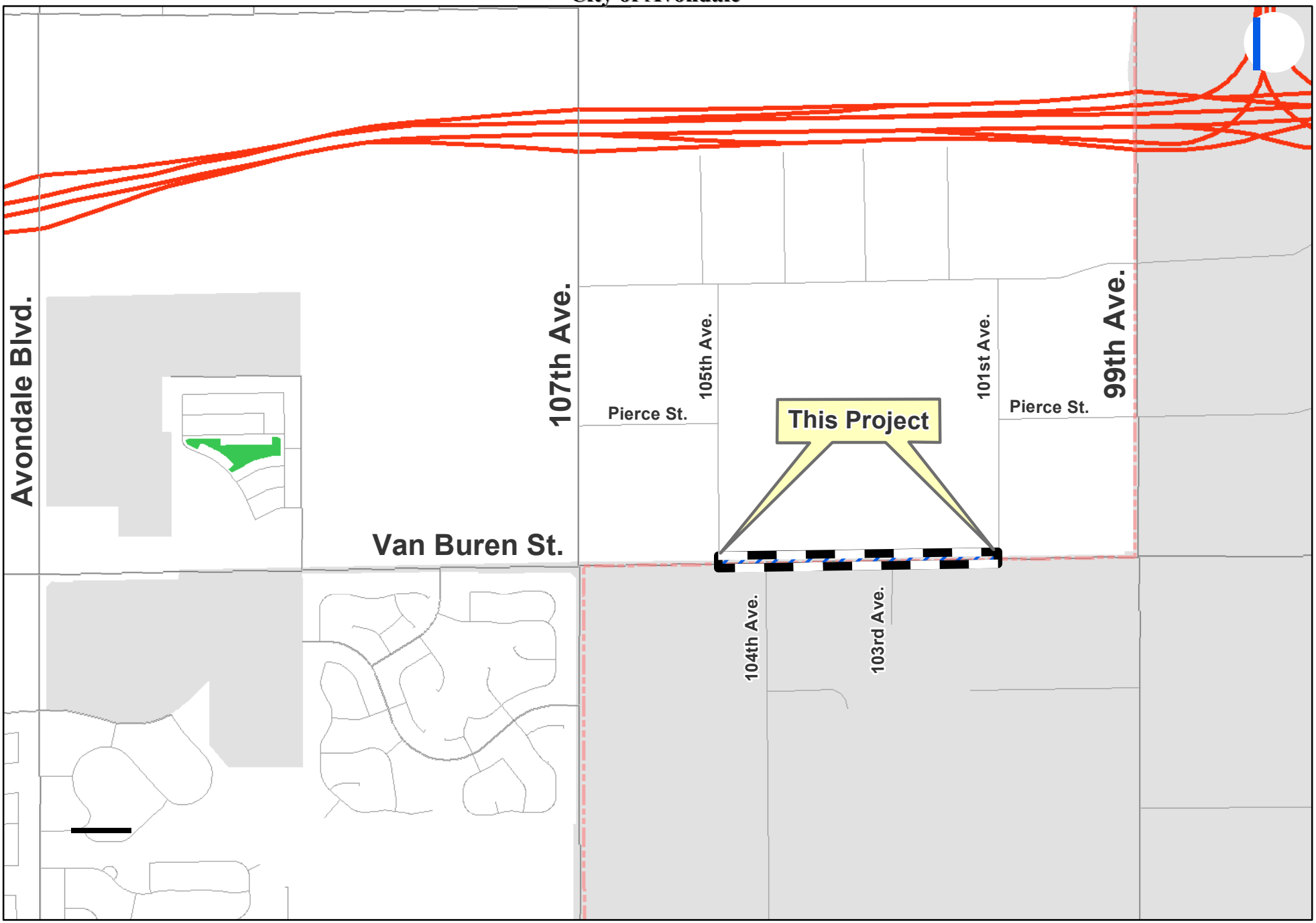

December 2006 - GIS / MAPPING SECTION

Van Buren Water Main
101st to 105th
and Emergency Connection

0 312.5 625 1,250 1,875 2,500 Feet

PROFESSIONAL SERVICES AGREEMENT
BETWEEN
THE CITY OF AVONDALE
AND
CAROLLO ENGINEERS, A PROFESSIONAL CORPORATION

THIS PROFESSIONAL SERVICES AGREEMENT (this "Agreement") is made as of December 18, 2006, between the City of Avondale, an Arizona municipal corporation (the "City") and Carollo Engineers, an Arizona professional corporation (the "Consultant").

RECITALS

A. The City issued a Request for Qualifications (the "RFQ") seeking statements of qualifications from Consultants for professional consulting services.

B. The Consultant responded to the RFQ and the City desires to enter into an Agreement with the Consultant for the Van Buren Water Main and Emergency Connection Design (the "Services").

AGREEMENT

NOW, THEREFORE, in consideration of the foregoing recitals, which are incorporated herein by reference, and the following mutual covenants and conditions, the City and the Consultant hereby agree as follows:

1. Term of Agreement. This Agreement shall be effective as of the date first set forth above and shall remain in full force and effect until September 28, 2007.

2. Scope of Work. Consultant shall provide the Services as set forth in the Scope of Work, attached hereto as Exhibit A and incorporated herein by reference.

3. Compensation. The City shall pay Consultant a price not to exceed $149,978.00 for the Services as set forth in the Fee Estimate, attached hereto as Exhibit B and incorporated herein by reference.

4. Payments. The City shall pay the Consultant monthly, based upon work performed and completed to date, and upon submission and approval of invoices. All invoices shall document and itemize all work completed to date. The invoice statement shall include a record of time expended and work performed in sufficient detail to justify payment.

5. Documents. All documents prepared and submitted to the City pursuant to this Agreement shall be the property of the City.

6. Consultant Personnel. Consultant shall provide adequate, experienced personnel, capable of and devoted to the successful completion of the Services to be performed under this Agreement. Consultant agrees to assign specific individuals to key positions. Consultant agrees that, upon commencement of the Services to be performed under this Agreement, key personnel

shall not be removed or replaced without prior written notice to the City. If key personnel are not available to perform the Services for a continuous period exceeding 30 calendar days, or are expected to devote substantially less effort to the Services than initially anticipated, Consultant shall immediately notify the City of same and shall, subject to the concurrence of the City, replace such personnel with personnel of substantially equal ability and qualifications.

7. Inspection; Acceptance. All work shall be subject to inspection and acceptance by the City at reasonable times during Consultant's performance. The Consultant shall provide and maintain a self-inspection system that is acceptable to the City.

8. Licenses; Materials. Consultant shall maintain in current status all federal, state and local licenses and permits required for the operation of the business conducted by the Consultant. The City has no obligation to provide Consultant, its employees or subcontractors any business registrations or licenses required to perform the specific services set forth in this Agreement. The City has no obligation to provide tools, equipment or material to Consultant.

9. Performance Warranty. Consultant warrants that the Services rendered will conform to the requirements of this Agreement and to the highest professional standards in the field.

10. Indemnification. To the fullest extent permitted by law, the Consultant shall indemnify, defend and hold harmless the City and each council member, officer, employee or agent thereof (the City and any such person being herein called an "Indemnified Party"), for, from and against any and all losses, claims, damages, liabilities, costs and expenses (including, but not limited to, reasonable attorneys' fees, court costs and the costs of appellate proceedings) to which any such Indemnified Party may become subject, under any theory of liability whatsoever ("Claims"), insofar as such Claims (or actions in respect thereof) relate to, arise out of, or are caused by or based upon the negligent acts, intentional misconduct, errors, mistakes or omissions, in connection with the work or services of the Consultant, its officers, employees, agents, or any tier of subcontractor in the performance of this Agreement. The amount and type of insurance coverage requirements set forth below will in no way be construed as limiting the scope of the indemnity in this Section.

11. Insurance.

11.1 General.

a. Insurer Qualifications. Without limiting any obligations or liabilities of Consultant, Consultant shall purchase and maintain, at its own expense, hereinafter stipulated minimum insurance with insurance companies duly licensed by the State of Arizona with an AM Best, Inc. rating of A- or above with policies and forms satisfactory to the City. Failure to maintain insurance as specified herein may result in termination of this Agreement at the City's option.

b. No Representation of Coverage Adequacy. By requiring insurance herein, the City does not represent that coverage and limits will be adequate to protect Consultant. The City reserves the right to review any and all of the insurance policies

and/or endorsements cited in this Agreement but has no obligation to do so. Failure to demand such evidence of full compliance with the insurance requirements set forth in this Agreement or failure to identify any insurance deficiency shall not relieve Consultant from, nor be construed or deemed a waiver of, its obligation to maintain the required insurance at all times during the performance of this Agreement.

c. Additional Insured. All insurance coverage and self-insured retention or deductible portions, except Workers' Compensation insurance and Professional Liability insurance, if applicable, shall name, to the fullest extent permitted by law for claims arising out of the performance of this Agreement, the City, its agents, representatives, officers, directors, officials and employees as Additional Insured as specified under the respective coverage sections of this Agreement.

d. Coverage Term. All insurance required herein shall be maintained in full force and effect until all work or services required to be performed under the terms of this Agreement are satisfactorily performed, completed and formally accepted by the City, unless specified otherwise in this Agreement.

e. Primary Insurance. Consultant's insurance shall be primary insurance with respect to performance of this Agreement and in the protection of the City as an Additional Insured.

f. Claims Made. In the event any insurance policies required by this Agreement are written on a "claims made" basis, coverage shall extend, either by keeping coverage in force or purchasing an extended reporting option, for three years past completion and acceptance of the services. Such continuing coverage shall be evidenced by submission of annual Certificates of Insurance citing applicable coverage is in force and contains the provisions as required herein for the three-year period.

g. Waiver. All policies, except for Professional Liability, including Workers' Compensation insurance, shall contain a waiver of rights of recovery (subrogation) against the City, its agents, representatives, officials, officers and employees for any claims arising out of the work or services of Consultant. Consultant shall arrange to have such subrogation waivers incorporated into each policy via formal written endorsement thereto.

h. Policy Deductibles and/or Self-Insured Retentions. The policies set forth in these requirements may provide coverage that contains deductibles or self-insured retention amounts. Such deductibles or self-insured retention shall not be applicable with respect to the policy limits provided to the City. Consultant shall be solely responsible for any such deductible or self-insured retention amount.

i. Use of Subcontractors. If any work under this Agreement is subcontracted in any way, Consultant shall execute written agreement with Subcontractor containing the indemnification provisions set forth in this Section and insurance requirements set forth herein protecting the City and Consultant. Consultant shall be

responsible for executing the agreement with Subcontractor and obtaining certificates of insurance verifying the insurance requirements.

j. Evidence of Insurance. Prior to commencing any work or services under this Agreement, Consultant shall furnish the City with certificate(s) of insurance, or formal endorsements as required by this Agreement, issued by Consultant's insurer(s) as evidence that policies are placed with acceptable insurers as specified herein and provide the required coverages, conditions and limits of coverage specified in this Agreement and that such coverage and provisions are in full force and effect. If a certificate of insurance is submitted as verification of coverage, the City shall reasonably rely upon the certificate of insurance as evidence of coverage but such acceptance and reliance shall not waive or alter in any way the insurance requirements or obligations of this Agreement. If any of the above-cited policies expire during the life of this Agreement, it shall be Consultant's responsibility to forward renewal certificates within ten days after the renewal date containing all the aforementioned insurance provisions. Additionally certificates of insurance submitted without referencing a contract number will be subject to rejection and returned or discarded. Certificates of insurance shall specifically include the following provisions:

(1) The City, its agents, representatives, officers, directors, officials and employees are Additional Insureds as follows:

(a) Commercial General Liability - Under Insurance Services Office, Inc., ("ISO") Form CG 20 10 03 97 or equivalent.

(b) Auto Liability - Under ISO Form CA 20 48 or equivalent.

(c) Excess Liability - Follow Form to underlying insurance.

(2) Consultant's insurance shall be primary insurance as respects performance of the Agreement.

(3) All policies, except for Professional Liability, including Workers' Compensation, waive rights of recovery (subrogation) against City, its agents, representatives, officers, officials and employees for any claims arising out of work or services performed by Consultant under this Agreement.

(4) A 30-day advance notice cancellation provision. If ACORD certificate of insurance form is used, the phrases in the cancellation provision "endeavor to" and "but failure to mail such notice shall impose no obligation or liability of any kind upon the company, its agents or representatives" shall be deleted. Certificate forms other than ACORD form shall have similar restrictive language deleted.

11.2 Required Insurance Coverage.

a. Commercial General Liability. Consultant shall maintain "occurrence" form Commercial General Liability insurance with an unimpaired limit of not less than $1,000,000 for each occurrence, $2,000,000 Products and Completed Operations Annual Aggregate and a $2,000,000 General Aggregate Limit. The policy shall cover liability arising from premises, operations, independent contractors, products-completed operations, personal injury and advertising injury. Coverage under the policy will be at least as broad as ISO policy form CG 00 010 93 or equivalent thereof, including but not limited to, separation of insured's clause. To the fullest extent allowed by law, for claims arising out of the performance of this Agreement, the City, its agents, representatives, officers, officials and employees shall be cited as an Additional Insured under ISO, Commercial General Liability Additional Insured Endorsement form CG 20 10 03 97, or equivalent, which shall read "Who is an Insured (Section II) is amended to include as an insured the person or organization shown in the Schedule, but only with respect to liability arising out of "your work" for that insured by or for you." If any Excess insurance is utilized to fulfill the requirements of this subsection, such Excess insurance shall be "follow form" equal or broader in coverage scope than underlying insurance.

b. Vehicle Liability. Consultant shall maintain Business Automobile Liability insurance with a limit of $1,000,000 each occurrence on Consultant's owned, hired and non-owned vehicles assigned to or used in the performance of the Consultant's work or services under this Agreement. Coverage will be at least as broad as ISO coverage code "1" "any auto" policy form CA 00 01 12 93 or equivalent thereof. To the fullest extent allowed by law, for claims arising out of the performance of this Agreement, the City, its agents, representatives, officers, directors, officials and employees shall be cited as an Additional Insured under ISO Business Auto policy Designated Insured Endorsement form CA 20 48 or equivalent. If any Excess insurance is utilized to fulfill the requirements of this subsection, such Excess insurance shall be "follow form" equal or broader in coverage scope than underlying insurance.

c. Professional Liability. If this Agreement is the subject of any professional services or work, or if the Consultant engages in any professional services or work adjunct or residual to performing the work under this Agreement, the Consultant shall maintain Professional Liability insurance covering negligent errors and omissions arising out of the Services performed by the Consultant, or anyone employed by the Consultant, or anyone for whose negligent acts, mistakes, errors and omissions the Consultant is legally liable, with an unimpaired liability insurance limit of $2,000,000 each claim and $2,000,000 all claims. In the event the Professional Liability insurance policy is written on a "claims made" basis, coverage shall extend for three years past completion and acceptance of the Services, and the Project Manager shall be required to submit certificates of insurance evidencing proper coverage is in effect as required above.

d. Workers' Compensation Insurance. Consultant shall maintain Workers' Compensation insurance to cover obligations imposed by federal and state

statutes having jurisdiction of Consultant's employees engaged in the performance of work or services under this Agreement and shall also maintain Employers Liability Insurance of not less than $500,000 for each accident, $500,000 disease for each employee and $1,000,000 disease policy limit.

11.3 Cancellation and Expiration Notice. Insurance required herein shall not expire, be canceled, or materially changed without 30 days' prior written notice to the City.

12. Applicable Law; Venue. In the performance of this Agreement, Consultant shall abide by and conform to any and all laws of the United States, State of Arizona and City of Avondale, including but not limited to, federal and state executive orders providing for equal employment and procurement opportunities, the Federal Occupational Safety and Health Act and any other federal or state laws applicable to this Agreement. This Agreement shall be governed by the laws of the State of Arizona and suit pertaining to this Agreement may be brought only in courts in the State of Arizona.

13. Termination; Cancellation.

13.1 For City's Convenience. This Agreement is for the convenience of the City and, as such, may be terminated without cause after receipt by Consultant of written notice by the City. Upon termination for convenience, Consultant shall be paid for all undisputed services performed to the termination date.

13.2 For Cause. This Agreement may be terminated by either party upon 30 days' written notice should the other party fail to substantially perform in accordance with this Agreement's terms, through no fault of the party initiating the termination. In the event of such termination for cause, payment shall be made by the City to the Consultant for the undisputed portion of its fee due as of the termination date.

13.3 Due to Work Stoppage. This Agreement may be terminated by the City upon 30 days' written notice to Consultant in the event that the Services are permanently abandoned. In the event of such termination due to work stoppage, payment shall be made by the City to the Consultant for the undisputed portion of its fee due as of the termination date.

13.4 Conflict of Interest. This Agreement is subject to the provisions of ARIZ. REV. STAT. § 38-511. The City may cancel this Agreement without penalty or further obligations by the City or any of its departments or agencies if any person significantly involved in initiating, negotiating, securing, drafting or creating this Agreement on behalf of the City or any of its departments or agencies is, at any time while the Agreement or any extension of the Agreement is in effect, an employee of any other party to the Agreement in any capacity or a Consultant to any other party of the Agreement with respect to the subject matter of the Agreement.

13.5 Gratuities. The City may, by written notice to the Consultant, cancel this Agreement if it is found by the City that gratuities, in the form of entertainment, gifts or otherwise, were offered or given by the Consultant or any agent or representative of the Consultant to any officer, agent or employee of the City for the purpose of securing this

Agreement. In the event this Agreement is cancelled by the City pursuant to this provision, the City shall be entitled, in addition to any other rights and remedies, to recover or withhold from the Consultant an amount equal to 150% of the gratuity.

14. Miscellaneous.

14.1 Independent Contractor. The Consultant acknowledges and agrees that the Services provided under this Agreement are being provided as an independent contractor, not as an employee or agent of the City. Consultant, its employees and subcontractors are not entitled to workers' compensation benefits from the City. The City does not have the authority to supervise or control the actual work of Consultant, its employees or subcontractors. The Consultant, and not the City, shall determine the time of its performance of the services provided under this Agreement so long as Consultant meets the requirements of its agreed scope of work as set forth in Section 2 above. Consultant is neither prohibited from entering into other contracts nor prohibited from practicing its profession elsewhere. City and Consultant do not intend to nor will they combine business operations under this Agreement.

14.2 Laws and Regulations. The Consultant shall keep fully informed and shall at all times during the performance of its duties under this Agreement ensure that it and any person for whom the Consultant is responsible remains in compliance with all rules, regulations, ordinances, statutes or laws affecting the Services, including the following: (i) existing and future City and County ordinances and regulations, (ii) existing and future state and federal laws and (iii) existing and future Occupational Safety and Health Administration ("OSHA") standards.

14.3 Amendments. This Agreement may be modified only by a written amendment signed by persons duly authorized to enter into contracts on behalf of the City and the Consultant.

14.4 Provisions Required by Law. Each and every provision of law and any clause required by law to be in the Agreement will be read and enforced as though it were included herein and, if through mistake or otherwise any such provision is not inserted, or is not correctly inserted, then upon the application of either party, the Agreement will promptly be physically amended to make such insertion or correction.

14.5 Severability. The provisions of this Agreement are severable to the extent that any provision or application held to be invalid by a Court of competent jurisdiction shall not affect any other provision or application of the Agreement which may remain in effect without the invalid provision or application.

14.6 Relationship of the Parties. It is clearly understood that each party will act in its individual capacity and not as an agent, employee, partner, joint venturer, or associate of the other. An employee or agent of one party shall not be deemed or construed to be the employee or agent of the other for any purpose whatsoever. The Consultant is advised that taxes or Social Security payments will not be withheld from any City payments issued hereunder and Consultant agrees to be fully and solely responsible for the payment of such taxes or any other tax applicable to this Agreement.

14.7 Entire Agreement; Interpretation; Parol Evidence. This Agreement represents the entire agreement of the parties with respect to its subject matter, and all previous agreements, whether oral or written, entered into prior to this Agreement are hereby revoked and superseded by this Agreement. No representations, warranties, inducements or oral agreements have been made by any of the parties except as expressly set forth herein, or in any other contemporaneous written agreement executed for the purposes of carrying out the provisions of this Agreement. This Agreement shall be construed and interpreted according to its plain meaning, and no presumption shall be deemed to apply in favor of, or against the party drafting the Agreement. The parties acknowledge and agree that each has had the opportunity to seek and utilize legal counsel in the drafting of, review of, and entry into this Agreement.

14.8 Assignment. No right or interest in this Agreement shall be assigned by Consultant without prior, written permission of the City signed by the City Manager and no delegation of any duty of Consultant shall be made without prior, written permission of the City signed by the City Manager. Any attempted assignment or delegation by Consultant in violation of this provision shall be a breach of this Agreement by Consultant.

14.9 Subcontracts. No subcontract shall be entered into by the Consultant with any other party to furnish any of the material or services specified herein without the prior written approval of the City. The Consultant is responsible for performance under this Agreement whether or not subcontractors are used.

14.10 Rights and Remedies. No provision in this Agreement shall be construed, expressly or by implication, as waiver by the City of any existing or future right and/or remedy available by law in the event of any claim of default or breach of this Agreement. The failure of the City to insist upon the strict performance of any term or condition of this Agreement or to exercise or delay the exercise of any right or remedy provided in this Agreement, or by law, or the City's acceptance of and payment for services, shall not release the Consultant from any responsibilities or obligations imposed by this Agreement or by law, and shall not be deemed a waiver of any right of the City to insist upon the strict performance of this Agreement.

14.11 Attorneys' Fees. In the event either party brings any action for any relief, declaratory or otherwise, arising out of this Agreement or on account of any breach or default hereof, the prevailing party shall be entitled to receive from the other party reasonable attorneys' fees and reasonable costs and expenses, determined by the court sitting without a jury, which shall be deemed to have accrued on the commencement of such action and shall be enforced whether or not such action is prosecuted through judgment.

14.12 Liens. All materials or services shall be free of all liens and, if the City requests, a formal release of all liens shall be delivered to the City.

14.13 Notices and Requests. Any notice or other communication required or permitted to be given under this Agreement shall be in writing and shall be deemed to have been duly given if (i) delivered to the party at the address set forth below, (ii) deposited in the U.S. Mail, registered or certified, return receipt requested, to the address set forth below, (iii) given to

a recognized and reputable overnight delivery service, to the address set forth below or (iv) delivered by facsimile transmission to the number set forth below:

If to the City:	City of Avondale 11465 West Civic Center Drive Avondale, Arizona 85323 Facsimile: 623-478-3802 Attn: Charles P. McClendon, City Manager
With copy to:	GUST ROSENFELD, P.L.C. 201 East Washington, Suite 800 Phoenix, Arizona 85004-2327 Facsimile: 602-340-1538 Attn: Andrew J. McGuire, Esq.
If to Consultant:	Carollo Engineers, a Professional Corporation 3033 North 44th Street, Suite 101 Phoenix, Arizona 85018 Facsimile: 602-265-1422 Attn: Mark E. Courtney, PE

or at such other address, and to the attention of such other person or officer, as any party may designate in writing by notice duly given pursuant to this Section. Notices shall be deemed received (i) when delivered to the party, (ii) three business days after being placed in the U.S. Mail, properly addressed, with sufficient postage, (iii) the following business day after being given to a recognized overnight delivery service, with the person giving the notice paying all required charges and instructing the delivery service to deliver on the following business day, or (iv) when received by facsimile transmission during the normal business hours of the recipient. If a copy of a notice is also given to a party's counsel or other recipient, the provisions above governing the date on which a notice is deemed to have been received by a party shall mean and refer to the date on which the party, and not its counsel or other recipient to which a copy of the notice may be sent, is deemed to have received the notice.

14.14 Confidentiality of Records. The Consultant shall establish and maintain procedures and controls that are acceptable to the City for the purpose of ensuring that information contained in its records or obtained from the City or from others in carrying out its obligations under this Agreement shall not be used or disclosed by it, its agents, officers, or employees, except as required to perform Consultant's duties under this Agreement. Persons requesting such information should be referred to the City. Consultant also agrees that any information pertaining to individual persons shall not be divulged other than to employees or officers of Consultant as needed for the performance of duties under this Agreement.

14.15 Conflicting Terms. In the event of a conflict between the RFQ, the Consultant's response to the RFQ, the Scope of Work, the Fee Estimate and this Agreement, the terms of this Agreement shall govern.

IN WITNESS WHEREOF, the parties hereto have executed this instrument as of the date and year first set forth above.

"**City**"

CITY OF AVONDALE, an Arizona municipal corporation

_____
Charles P. McClendon, City Manager

ATTEST:

_____
Linda M. Farris, City Clerk

"**Consultant**"

CAROLLO ENGINEERS, an Arizona professional corporation

By:_____

Name:_____

Its:_____

By:_____

Name:_____

Its:_____

(ACKNOWLEDGEMENTS)

STATE OF ARIZONA)
) ss.
COUNTY OF MARICOPA)

This instrument was acknowledged before me on _____, 2006, by Charles P. McClendon, the City Manager of the CITY OF AVONDALE, an Arizona municipal corporation, on behalf of the City of Avondale.

_____
Notary Public in and for the State of Arizona

My Commission Expires:

_____

STATE OF ARIZONA)
) ss.
COUNTY OF MARICOPA)

This instrument was acknowledged before me on _____, 2006, by _____ as _____ of CAROLLO ENGINEERS, an Arizona professional corporation, on behalf of the corporation.

_____
Notary Public in and for the State of Arizona

My Commission Expires:

_____

EXHIBIT A
TO
PROFESSIONAL SERVICES AGREEMENT
BETWEEN
THE CITY OF AVONDALE
AND
CAROLLO ENGINEERS, A PROFESSIONAL CORPORATION

[Scope of Work]

See following pages.

City of Avondale
Water Resources Department

Van Buren Water Main & Emergency Connection Design

Scope of Services

November 13, 2006

Background

Based on the City of Avondale water system master plan and on current and proposed development, the City is proposing improvements to the water system in the area of Van Buren and 107th Avenue. The improvements include design for two major system components: 1) New water main in Van Buren Street – 16 inch diameter from 105th Avenue to 101st Avenue, and 12 inch diameter from 101st Avenue to 99th Avenue; and 2) Emergency connection between the City of Avondale and the City of Tolleson water distribution systems in the area of the 99th and Van Buren intersection.

Carollo Engineers will provide the water system improvement designs in accordance with the following scope of work. It is assumed that the two water system design components will be combined as one design package of plans and specifications.

Project Assumptions

1. Specifications for the water system design will be Maricopa Association of Governments (MAG) Standards, supplemented with project special provisions and City of Avondale provisions.
2. The design documents for these water system improvements will be developed for use by the City to competitively bid the construction. Post-design services are limited to bidding assistance, material/equipment submittal reviews, and preparation of record drawings. Meetings, site visits, and coordination during construction are not included in this scope of services.

Scope of Work

1) Van Buren Water Main Design

1.1. Field Survey, Geotechnical Investigation and Potholing

1.1.1. Conduct field survey to provide topography and control for design base maps. Field survey will include the proposed water main corridor, and the proposed sites (in the proximity of the 99th Avenue and Van Buren intersection) for the water quality monitoring station (separate design contract) and the emergency water system connection.

1.1.2. Conduct geotechnical investigation to serve as the basis of design for the water mains, the water quality monitoring station (separate design contract), and the emergency water system connection. It is assumed that the monitoring station and the emergency connection will be located in or near the 99th Avenue and Van Buren intersection.

1.1.3. Provide potholing for utility locations, including field survey to define coordinates and depths of potholes.

1.2. Utility Review and Coordination

1.2.1. Obtain and review information on existing utilities in the project areas.

1.2.2. Submit plans to affected utility companies for review and comment.

1.3. Permits and Agency Approvals

1.3.1. Provide communication and coordination with Maricopa County Environmental Services Department (MCESD), City of Tolleson, and City of Avondale regarding the proposed water system improvements.

1.3.2. Assist the City with preparation, submittal, and review coordination for the Approval to Construct with MCESD.

1.4. Detailed Design – Water Mains

1.4.1. Basis of Design (35%) – Prepare and submit Basis of Design Report for the water mains and appurtenances. This submittal will address utility conflicts, preliminary location of pipeline, preliminary pipeline materials recommendations, and initial opinion of probable construction costs.

1.4.2. Preliminary Design (75%) – Prepare and submit preliminary plans and special provisions, which incorporate comments and information provided from utility and City reviews. Provide an updated opinion of probable construction costs.

1.4.3. Final Submittal – Prepare and submit final plans, special provisions, and opinion of probable construction costs for the water main additions.

2) Emergency Water System Connection

2.1. Detailed Design – Emergency Water System Connection

2.1.1. Basis of Design (35%) – Prepare and submit Basis of Design Report for the emergency water system connection. This submittal will address utility conflicts, preliminary location and layout, equipment and material recommendations, and initial opinion of probable construction costs.

2.1.2. Preliminary Design (75%) – Prepare and submit preliminary plans and special provisions, which incorporate comments and information provided from utility and City reviews. Provide an updated opinion of probable construction costs.

2.1.3. Final Submittal – Prepare and submit final plans, special provisions, and opinion of probable construction costs for the emergency water system connection.

3) Bidding & Construction Phase Services

3.1. Assist the City with questions during the bidding period and with reviewing bids to support contract award.

3.2. Review material and equipment submittals for consistency with the project plans and specifications.

3.3. Prepare record drawings based on the contractor's field records. The City will provide the contractor's field drawings to Carollo for preparation of the record drawings.

3.4. Assist the City with submittal of final project information to MCESD for the Approval of Construction.

4) Project Management

4.1. Schedule and conduct project meetings, including project kickoff, progress, and information gathering/coordination meetings. Prepare and distribute agendas and minutes for each meeting.

4.2. Provide ongoing project management, including progress reports/billings, schedule maintenance, and quality assurance plan implementation.

5) Project Deliverables

5.1. Tasks 1 and 2 - Designs for Water Mains and Emergency Water System Connection

5.1.1. Results of Field Survey, Geotechnical Investigation, and Potholing

5.1.2. Basis of Design Report (35%)

5.1.3. Preliminary Design Submittal (75%) - Plans, Special Provisions, and Opinion of Probable Construction Costs

5.1.4. Final Submittal - Final Plans, Special Provisions, and Opinion of Probable Construction Costs (Sealed originals and digital copy)

<u>Standard of Care</u>

Carollo shall be responsible to the level of competency and standard of care presently maintained by other practicing Professional Engineers performing the same or similar type of work at the time notice to proceed is issued. Carollo and City of Avondale mutually agree that standard of care, as applied to design professionals, shall be defined as the ordinary and reasonable care required and established by expert testimony of what a reasonable and prudent professional would have done under the same or similar circumstances.

Carollo shall not be responsible for the means, methods, techniques, sequences, or procedures of construction selected by contractors or the safety precautions and programs incident to the work of contractors and will not be responsible for Contractor's failure to carry out work in accordance with the Contract Documents.

<u>Opinions of Costs</u>

Carollo has no control over the cost of labor, materials, equipment, or services furnished by others, or over Contractor's methods of determining prices, or other competitive bidding or market conditions, practices, or bidding strategies. Cost estimates are based on Carollo's opinion based on experience and judgment. Carollo cannot and does not guarantee that proposals, bids, or actual Project construction costs will not vary from cost estimates prepared by Carollo.

EXHIBIT B
TO
PROFESSIONAL SERVICES AGREEMENT
BETWEEN
THE CITY OF AVONDALE
AND
CAROLLO ENGINEERS, A PROFESSIONAL CORPORATION

[Fee Estimate]

See following pages.

ESTIMATED TASKS, MAN-HOURS and COSTS
Van Buren Water Main and Emergency Connection Design
City of Avondale, Arizona
November 13, 2006

TASKS	Man-Hours						Total Man-Hours Per Task
	Partner in Charge	Project Manager	Project Engineer	Engineer	Technician	Word Proc./ Clerical	
1. Van Buren Water Main Design							
1.1 Field Survey, Geotech & Potholing [1]							
1.1.1 Coordinate field survey & data	1	4	8				13
1.1.2 Coordinate geotech investigation & results	1	4	8				13
1.1.3 Coordinate potholing & results	1	4	8				13
1.2 Utility Review & Coordination [1]							
1.2.1 Obtain & review utility information		4	4	8	4	4	24
1.2.2 Submit plans to utilities & coordinate comments	1	4	4	8	4	4	25
1.3 Permits & Agency Approvals [1]							
1.3.1 Provide agency coordination & communications	2	16	16	8		4	46
1.3.2 Assist with Approval to Construct - MCESD	2	8	8	8	8	4	38
1.4 Detailed Design - Water Main							
1.4.1 Basis of Design (35%) for water mains	2	8	40	60	80	8	198
1.4.2 Preliminary Design (75%) for water mains	2	8	40	60	80	8	198
1.4.3 Final Submittal for water mains	2	8	24	40	40	8	122
Subtotal Van Buren Water Main Design	**14**	**68**	**160**	**192**	**216**	**40**	**690**
Subtotal Labor Cost							**$96,860**
2. Emergency Water System Connection Design							
2.1 Detailed Design - Emergency Water System Connection							
2.1.1 Basis of Design (35%) for emergency connection	1	2	8	8	8	2	29
2.1.2 Preliminary Design (75%) for emergency connection	1	2	4	8	8	2	25
2.1.3 Final Submittal for emergency connection	1	2	4	8	8	2	25
Subtotal Emergency Water System Connection Design	**3**	**6**	**16**	**24**	**24**	**6**	**79**
Subtotal Labor Cost							**$10,978**

ESTIMATED TASKS, MAN-HOURS and COSTS
Van Buren Water Main and Emergency Connection Design
City of Avondale, Arizona
November 13, 2006

TASKS	Man-Hours						Total Man-Hours Per Task
	Partner in Charge	Project Manager	Project Engineer	Engineer	Technician	Word Proc./ Clerical	
3. Bidding & Construction Phase Services							
3.1 Assist City with Bidding & Award		8	8		4	4	24
3.2 Review Material & Equipment Submittals		2	8	8			18
3.3 Prepare Record Drawings		2	8	8	16	4	38
3.4 Assist with MCESD Approval of Construction		2	8				10
Subtotal Bidding & Construction Phase Services	**0**	**14**	**32**	**16**	**20**	**8**	**90**
Subtotal Labor Cost							**$13,368**
4. Project Management							
4.1 Schedule & Conduct Project Meetings		16	16			4	36
4.2 Project Management		8				4	12
Subtotal Project Management	**0**	**24**	**16**	**0**	**0**	**8**	**48**
Subtotal Labor Cost							**$8,272**
Total Estimated Man-Hours	**17**	**112**	**224**	**232**	**260**	**62**	**907**
Total Lump Sum Labor Costs	**$3,706**	**$22,176**	**$39,872**	**$34,336**	**$24,180**	**$5,208**	**$129,478**

Note 1: The field survey, geotechnical investigation, and potholing tasks include the intersection site for the separate Water Quality Monitoring Station design project.

Allowances	
Field Survey [1]	$11,000
Geotechnical Investigation [1]	$6,000
Potholing [1]	$2,500
Mileage, Printing & Misc.	$1,000
Subtotal Allowances	**$20,500**
TOTAL ESTIMATED COST	**$149,978**

CITY COUNCIL REPORT

SUBJECT:
Professional Planning and Engineering Services Agreement with DMJM Harris Engineering for a Design Concept Report and Construction Improvement Plans at Avondale Boulevard and Interstate 10

MEETING DATE:
December 18, 2006

TO: Mayor and Council

FROM: Carnell Thurman, P.E., City Engineer - (623) 478-3271

THROUGH: Charlie McClendon, City Manager

PURPOSE:

Staff is requesting that the City Council approve a Professional Services Contract with DMJM Harris Engineering to prepare a Design Concept Report (DCR); and utilize the report to prepare construction plans for dedicated dual right turn lanes at the Avondale Boulevard I-10 traffic interchange in the amount of $79,968 and authorize the Mayor or City Manager and City Clerk to execute the necessary documents.

BACKGROUND:

The Arizona Department of Transportation (ADOT) is in the process of preparing improvement plans to widen Interstate-10 (I-10) freeway. The I-10 widening project will be constructed in two phases, with the first phase consisting of paving the median area; and the second phase consisting of paving the outside shoulders. Staff and members of the ADOT project team have coordinated an evaluation of the City's I-10 interchange system. The system consists of interchanges at 107th Avenue, Avondale Boulevard and at Dysart Road. The results of the evaluation concluded the following:

· 107th Avenue I-10 bridge is inadequate for future widening. ADOT has identified the need for a new bridge.
· Dysart Road interchange currently meets future travel demands and the existing bridge is adequate.
· The Avondale Boulevard interchange requires further investigation.

Recent traffic reports completed by the developments along Avondale identify the need for a dual right turn lane to accommodate northbound to eastbound traffic at the Avondale Boulevard I-10 interchange. During the morning, traffic backs up over a ¼ mile to access eastbound I-10. Therefore, a right turn lane improvement project was identified in the Capital Improvement Plan to begin fiscal year 06-07.

The City's Transportation Plan identifies the need to widen Avondale Boulevard at I-10 in 2016; however, developing a Design Concept Report at this time will provide the following benefits:

- Provides a tool to plan the widening.
- Determines if the existing I-10 bridge at the Avondale Boulevard interchange will support the future widening needs of the City.
- Determines the ultimate location of the dual right turn lane.
- Determines the ultimate location of traffic signals.

- Determines the ultimate right-of-way needs at the interchange.
- Allows staff to pursue acquisition of the right-of-way immediately.
- Allows staff to pursue grant opportunities for the future widening.
- Allows staff to develop an intergovernmental agreement with Arizona Department of Transportation.
- Allows the City to proceed with widening of the Avondale Boulevard underpass should the need arise sooner than FY 2016.

DISCUSSION:

The Avondale Boulevard project limits are from approximately Roosevelt Street through the I-10 underpass to the northern limits of the ADOT drainage channel bridge. The Scope of Services shall consist of providing a comprehensive conceptual report to the City with an optimized recommendation on how to widen the Avondale Boulevard underpass; in addition to preparing final construction documents for the necessary dual right turn lanes. All deliverables will be performed in ADOT format. The Design Concept Report will comprise the following core elements:

- Traffic Study Report
- American Association of State Highway Transportation Officials (AASHTO) Design Criteria Report
- Geotechnical Investigation
- Bridge Analysis
- Right-of-Way Analysis
- Preliminary Subsurface Utility Investigation
- Detailed Cost Estimate
- Preliminary Improvement Plans

The construction plans for the dual right turn lane shall consist of the following core elements:

- Roadway Construction Sheets
- Traffic Signal Relocation Sheets
- Final Construction Specifications
- Final Engineers Estimate of Probable cost

Staff has been in negotiations with DMJM Harris Engineering since August of 2006. Staff reviewed the list of pre-qualified firms and found DMJM Harris Engineering to be the best qualified to provide Engineering design consulting services for this project. Staff has contacted references and found that DMJM Harris Engineering is considered to be a competent, knowledgeable, and highly recommended consultant based on similar projects. Staff requested, received, and negotiated a proposal from DMJM Harris Engineering for engineering services for the development of a Design Concept Report for the Avondale Boulevard Underpass, as well as preparation of construction plans for dual right turn lane improvements. Staff reviewed the proposal and negotiated the scope of work and contract price in the amount of $79,968. (See attached).

SCHEDULE:

Upon Council approval, the tentative schedule and milestones for this project are as follows:

- Initial DCR Submittal 03/14/07
- Final DCR Submittal 04/20/07

- 60% Right Turn Lane Submittal 05/18/07
- 95% Right Turn Lane Submittal 07/13/07
- Final Construction Plans 08/31/07

A Notice to Proceed is anticipated to be released January 01, 2007.

BUDGETARY IMPACT:

Funding for this project is budgeted in the Street Funds Line Item No. 304-1157-00-8001.

RECOMENDATION:

Staff recommends that the City Council approve a Professional Services contract with DMJM Harris Engineering to prepare a Design Concept Report (DCR); and utilize the report to prepare construction plans for dedicated dual right turn lanes at the Avondale Boulevard and I-10 traffic interchange in the amount of $79,968 and authorize the Mayor or City Manager and City Clerk to execute the necessary documents.

ATTACHMENTS:

Click to download

- Vicinity Map
- PSA

VICINITY MAP

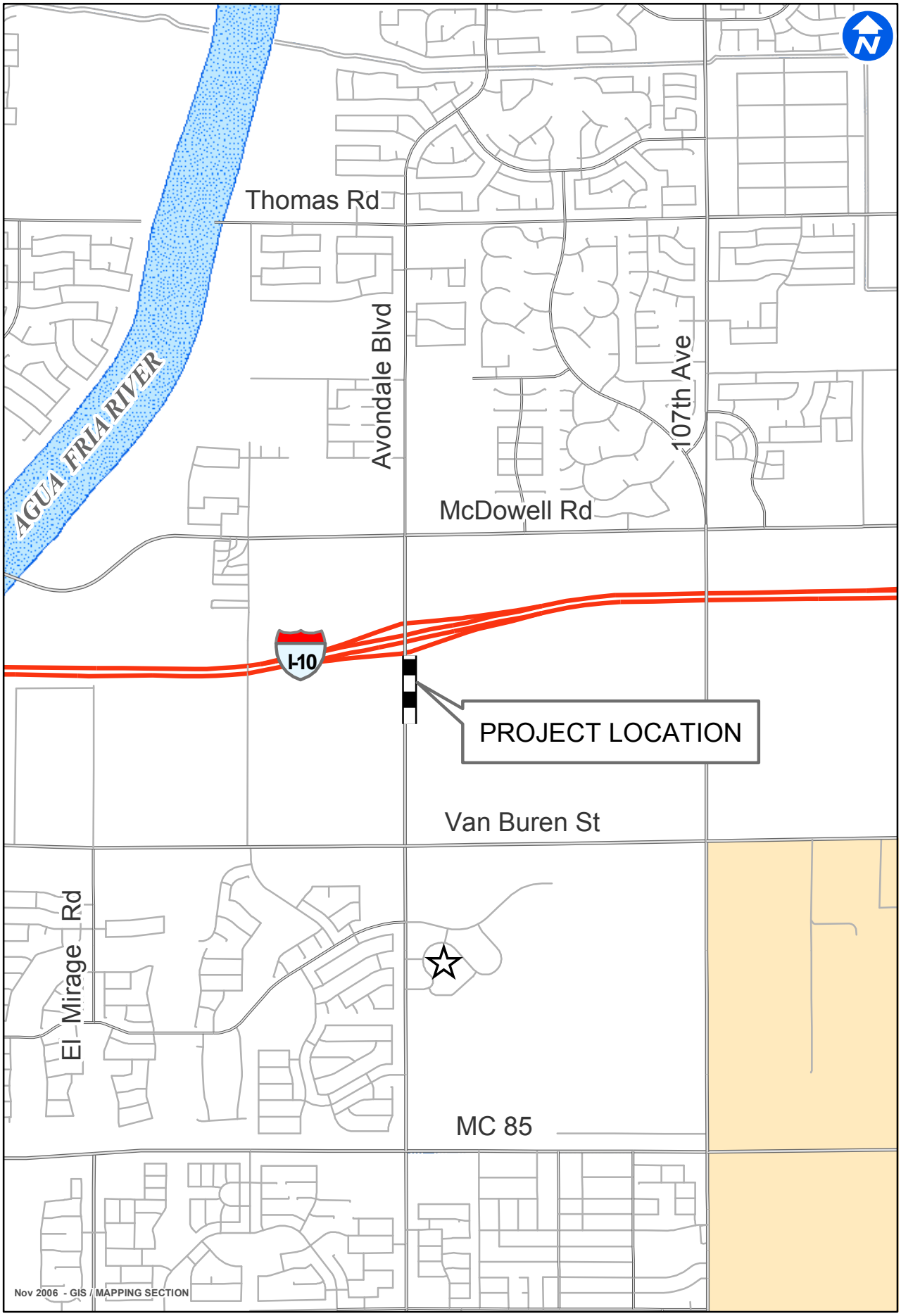

CITY OF AVONDALE

Dedicated Right Turn Lanes at the Avondale Bl I-10 Interchange

PROFESSIONAL SERVICES AGREEMENT
BETWEEN
THE CITY OF AVONDALE
AND
DMJM+HARRIS, INC.

THIS PROFESSIONAL SERVICES AGREEMENT (this "Agreement") is made as of December 18, 2006, between the City of Avondale, an Arizona municipal corporation (the "City") and DMJM+Harris, Inc., a New York corporation (the "Consultant").

RECITALS

A. The City issued a Request for Qualifications (the "RFQ") seeking statements of qualifications from Consultants for professional consulting services.

B. The Consultant responded to the RFQ and the City desires to enter into an Agreement with the Consultant for services with respect to Avondale Boulevard (the "Services").

AGREEMENT

NOW, THEREFORE, in consideration of the foregoing recitals, which are incorporated herein by reference, and the following mutual covenants and conditions, the City and the Consultant hereby agree as follows:

1. Term of Agreement. This Agreement shall be effective as of the date first set forth above and shall remain in full force and effect until August 31, 2007.

2. Scope of Work. Consultant shall provide the Services as set forth in the Scope of Work, attached hereto as Exhibit A and incorporated herein by reference.

3. Compensation. The City shall pay Consultant a price not to exceed $79,968.00 for the Services as set forth in the Fee Estimate, attached hereto as Exhibit B and incorporated herein by reference.

4. Payments. The City shall pay the Consultant monthly, based upon work performed and completed to date, and upon submission and approval of invoices. All invoices shall document and itemize all work completed to date. The invoice statement shall include a record of time expended and work performed in sufficient detail to justify payment.

5. Documents. All documents prepared and submitted to the City pursuant to this Agreement shall be the property of the City.

6. Consultant Personnel. Consultant shall provide adequate, experienced personnel, capable of and devoted to the successful completion of the Services to be performed under this Agreement. Consultant agrees to assign specific individuals to key positions. Consultant agrees that, upon commencement of the Services to be performed under this Agreement, key personnel shall not be removed or replaced without prior written notice to the City. If key personnel are

not available to perform the Services for a continuous period exceeding 30 calendar days, or are expected to devote substantially less effort to the Services than initially anticipated, Consultant shall immediately notify the City of same and shall, subject to the concurrence of the City, replace such personnel with personnel of substantially equal ability and qualifications.

7. Inspection; Acceptance. All work shall be subject to inspection and acceptance by the City at reasonable times during Consultant's performance. The Consultant shall provide and maintain a self-inspection system that is acceptable to the City.

8. Licenses; Materials. Consultant shall maintain in current status all federal, state and local licenses and permits required for the operation of the business conducted by the Consultant. The City has no obligation to provide Consultant, its employees or subcontractors any business registrations or licenses required to perform the specific services set forth in this Agreement. The City has no obligation to provide tools, equipment or material to Consultant.

9. Performance Warranty. Consultant warrants that the Services rendered will conform to the requirements of this Agreement and to the highest professional standards in the field.

10. Indemnification. To the fullest extent permitted by law, the Consultant shall indemnify, defend and hold harmless the City and each council member, officer, employee or agent thereof (the City and any such person being herein called an "Indemnified Party"), for, from and against any and all losses, claims, damages, liabilities, costs and expenses (including, but not limited to, reasonable attorneys' fees, court costs and the costs of appellate proceedings) to which any such Indemnified Party may become subject, under any theory of liability whatsoever ("Claims"), insofar as such Claims (or actions in respect thereof) relate to, arise out of, or are caused by or based upon the negligent acts, intentional misconduct, errors, mistakes or omissions, in connection with the work or services of the Consultant, its officers, employees, agents, or any tier of subcontractor in the performance of this Agreement. The amount and type of insurance coverage requirements set forth below will in no way be construed as limiting the scope of the indemnity in this Section.

11. Insurance.

11.1 General.

a. Insurer Qualifications. Without limiting any obligations or liabilities of Consultant, Consultant shall purchase and maintain, at its own expense, hereinafter stipulated minimum insurance with insurance companies duly licensed by the State of Arizona with an AM Best, Inc. rating of A- or above with policies and forms satisfactory to the City. Failure to maintain insurance as specified herein may result in termination of this Agreement at the City's option.

b. No Representation of Coverage Adequacy. By requiring insurance herein, the City does not represent that coverage and limits will be adequate to protect Consultant. The City reserves the right to review any and all of the insurance policies and/or endorsements cited in this Agreement but has no obligation to do so. Failure to

demand such evidence of full compliance with the insurance requirements set forth in this Agreement or failure to identify any insurance deficiency shall not relieve Consultant from, nor be construed or deemed a waiver of, its obligation to maintain the required insurance at all times during the performance of this Agreement.

c. Additional Insured. All insurance coverage and self-insured retention or deductible portions, except Workers' Compensation insurance and Professional Liability insurance, if applicable, shall name, to the fullest extent permitted by law for claims arising out of the performance of this Agreement, the City, its agents, representatives, officers, directors, officials and employees as Additional Insured as specified under the respective coverage sections of this Agreement.

d. Coverage Term. All insurance required herein shall be maintained in full force and effect until all work or services required to be performed under the terms of this Agreement are satisfactorily performed, completed and formally accepted by the City, unless specified otherwise in this Agreement.

e. Primary Insurance. Consultant's insurance shall be primary insurance with respect to performance of this Agreement and in the protection of the City as an Additional Insured.

f. Claims Made. In the event any insurance policies required by this Agreement are written on a "claims made" basis, coverage shall extend, either by keeping coverage in force or purchasing an extended reporting option, for three years past completion and acceptance of the services. Such continuing coverage shall be evidenced by submission of annual Certificates of Insurance citing applicable coverage is in force and contains the provisions as required herein for the three-year period.

g. Waiver. All policies, except for Professional Liability, including Workers' Compensation insurance, shall contain a waiver of rights of recovery (subrogation) against the City, its agents, representatives, officials, officers and employees for any claims arising out of the work or services of Consultant. Consultant shall arrange to have such subrogation waivers incorporated into each policy via formal written endorsement thereto.

h. Policy Deductibles and/or Self-Insured Retentions. The policies set forth in these requirements may provide coverage that contains deductibles or self-insured retention amounts. Such deductibles or self-insured retention shall not be applicable with respect to the policy limits provided to the City. Consultant shall be solely responsible for any such deductible or self-insured retention amount.

i. Use of Subcontractors. If any work under this Agreement is subcontracted in any way, Consultant shall execute written agreement with Subcontractor containing the indemnification provisions set forth in this Section and insurance requirements set forth herein protecting the City and Consultant. Consultant shall be responsible for executing the agreement with Subcontractor and obtaining certificates of insurance verifying the insurance requirements.

j. Evidence of Insurance. Prior to commencing any work or services under this Agreement, Consultant shall furnish the City with certificate(s) of insurance, or formal endorsements as required by this Agreement, issued by Consultant's insurer(s) as evidence that policies are placed with acceptable insurers as specified herein and provide the required coverages, conditions and limits of coverage specified in this Agreement and that such coverage and provisions are in full force and effect. If a certificate of insurance is submitted as verification of coverage, the City shall reasonably rely upon the certificate of insurance as evidence of coverage but such acceptance and reliance shall not waive or alter in any way the insurance requirements or obligations of this Agreement. If any of the above-cited policies expire during the life of this Agreement, it shall be Consultant's responsibility to forward renewal certificates within ten days after the renewal date containing all the aforementioned insurance provisions. Additionally certificates of insurance submitted without referencing a contract number will be subject to rejection and returned or discarded. Certificates of insurance shall specifically include the following provisions:

(1) The City, its agents, representatives, officers, directors, officials and employees are Additional Insureds as follows:

(a) Commercial General Liability - Under Insurance Services Office, Inc., ("ISO") Form CG 20 10 03 97 or equivalent.

(b) Auto Liability - Under ISO Form CA 20 48 or equivalent.

(c) Excess Liability - Follow Form to underlying insurance.

(2) Consultant's insurance shall be primary insurance as respects performance of the Agreement.

(3) All policies, except for Professional Liability, including Workers' Compensation, waive rights of recovery (subrogation) against City, its agents, representatives, officers, officials and employees for any claims arising out of work or services performed by Consultant under this Agreement.

(4) A 30-day advance notice cancellation provision. If ACORD certificate of insurance form is used, the phrases in the cancellation provision "endeavor to" and "but failure to mail such notice shall impose no obligation or liability of any kind upon the company, its agents or representatives" shall be deleted. Certificate forms other than ACORD form shall have similar restrictive language deleted.

11.2 Required Insurance Coverage.

a. Commercial General Liability. Consultant shall maintain "occurrence" form Commercial General Liability insurance with an unimpaired limit of not less than $1,000,000 for each occurrence, $2,000,000 Products and Completed Operations Annual Aggregate and a $2,000,000 General Aggregate Limit. The policy shall cover liability arising from premises, operations, independent contractors, products-completed operations, personal injury and advertising injury. Coverage under the policy will be at least as broad as ISO policy form CG 00 010 93 or equivalent thereof, including but not limited to, separation of insured's clause. To the fullest extent allowed by law, for claims arising out of the performance of this Agreement, the City, its agents, representatives, officers, officials and employees shall be cited as an Additional Insured under ISO, Commercial General Liability Additional Insured Endorsement form CG 20 10 03 97, or equivalent, which shall read "Who is an Insured (Section II) is amended to include as an insured the person or organization shown in the Schedule, but only with respect to liability arising out of "your work" for that insured by or for you." If any Excess insurance is utilized to fulfill the requirements of this subsection, such Excess insurance shall be "follow form" equal or broader in coverage scope than underlying insurance.

b. Vehicle Liability. Consultant shall maintain Business Automobile Liability insurance with a limit of $1,000,000 each occurrence on Consultant's owned, hired and non-owned vehicles assigned to or used in the performance of the Consultant's work or services under this Agreement. Coverage will be at least as broad as ISO coverage code "1" "any auto" policy form CA 00 01 12 93 or equivalent thereof. To the fullest extent allowed by law, for claims arising out of the performance of this Agreement, the City, its agents, representatives, officers, directors, officials and employees shall be cited as an Additional Insured under ISO Business Auto policy Designated Insured Endorsement form CA 20 48 or equivalent. If any Excess insurance is utilized to fulfill the requirements of this subsection, such Excess insurance shall be "follow form" equal or broader in coverage scope than underlying insurance.

c. Professional Liability. If this Agreement is the subject of any professional services or work, or if the Consultant engages in any professional services or work adjunct or residual to performing the work under this Agreement, the Consultant shall maintain Professional Liability insurance covering negligent errors and omissions arising out of the Services performed by the Consultant, or anyone employed by the Consultant, or anyone for whose negligent acts, mistakes, errors and omissions the Consultant is legally liable, with an unimpaired liability insurance limit of $2,000,000 each claim and $2,000,000 all claims. In the event the Professional Liability insurance policy is written on a "claims made" basis, coverage shall extend for three years past completion and acceptance of the Services, and the Project Manager shall be required to submit certificates of insurance evidencing proper coverage is in effect as required above.

d. Workers' Compensation Insurance. Consultant shall maintain Workers' Compensation insurance to cover obligations imposed by federal and state

statutes having jurisdiction of Consultant's employees engaged in the performance of work or services under this Agreement and shall also maintain Employers Liability Insurance of not less than $500,000 for each accident, $500,000 disease for each employee and $1,000,000 disease policy limit.

11.3 Cancellation and Expiration Notice. Insurance required herein shall not expire, be canceled, or materially changed without 30 days' prior written notice to the City.

12. Applicable Law; Venue. In the performance of this Agreement, Consultant shall abide by and conform to any and all laws of the United States, State of Arizona and City of Avondale, including but not limited to, federal and state executive orders providing for equal employment and procurement opportunities, the Federal Occupational Safety and Health Act and any other federal or state laws applicable to this Agreement. This Agreement shall be governed by the laws of the State of Arizona and suit pertaining to this Agreement may be brought only in courts in the State of Arizona.

13. Termination; Cancellation.

13.1 For City's Convenience. This Agreement is for the convenience of the City and, as such, may be terminated without cause after receipt by Consultant of written notice by the City. Upon termination for convenience, Consultant shall be paid for all undisputed services performed to the termination date.

13.2 For Cause. This Agreement may be terminated by either party upon 30 days' written notice should the other party fail to substantially perform in accordance with this Agreement's terms, through no fault of the party initiating the termination. In the event of such termination for cause, payment shall be made by the City to the Consultant for the undisputed portion of its fee due as of the termination date.

13.3 Due to Work Stoppage. This Agreement may be terminated by the City upon 30 days' written notice to Consultant in the event that the Services are permanently abandoned. In the event of such termination due to work stoppage, payment shall be made by the City to the Consultant for the undisputed portion of its fee due as of the termination date.

13.4 Conflict of Interest. This Agreement is subject to the provisions of ARIZ. REV. STAT. § 38-511. The City may cancel this Agreement without penalty or further obligations by the City or any of its departments or agencies if any person significantly involved in initiating, negotiating, securing, drafting or creating this Agreement on behalf of the City or any of its departments or agencies is, at any time while the Agreement or any extension of the Agreement is in effect, an employee of any other party to the Agreement in any capacity or a Consultant to any other party of the Agreement with respect to the subject matter of the Agreement.

13.5 Gratuities. The City may, by written notice to the Consultant, cancel this Agreement if it is found by the City that gratuities, in the form of entertainment, gifts or otherwise, were offered or given by the Consultant or any agent or representative of the Consultant to any officer, agent or employee of the City for the purpose of securing this

Agreement. In the event this Agreement is cancelled by the City pursuant to this provision, the City shall be entitled, in addition to any other rights and remedies, to recover or withhold from the Consultant an amount equal to 150% of the gratuity.

14. Miscellaneous.

14.1 Independent Contractor. The Consultant acknowledges and agrees that the Services provided under this Agreement are being provided as an independent contractor, not as an employee or agent of the City. Consultant, its employees and subcontractors are not entitled to workers' compensation benefits from the City. The City does not have the authority to supervise or control the actual work of Consultant, its employees or subcontractors. The Consultant, and not the City, shall determine the time of its performance of the services provided under this Agreement so long as Consultant meets the requirements of its agreed scope of work as set forth in Section 2 above. Consultant is neither prohibited from entering into other contracts nor prohibited from practicing its profession elsewhere. City and Consultant do not intend to nor will they combine business operations under this Agreement.

14.2 Laws and Regulations. The Consultant shall keep fully informed and shall at all times during the performance of its duties under this Agreement ensure that it and any person for whom the Consultant is responsible remains in compliance with all rules, regulations, ordinances, statutes or laws affecting the Services, including the following: (i) existing and future City and County ordinances and regulations, (ii) existing and future state and federal laws and (iii) existing and future Occupational Safety and Health Administration ("OSHA") standards.

14.3 Amendments. This Agreement may be modified only by a written amendment signed by persons duly authorized to enter into contracts on behalf of the City and the Consultant.

14.4 Provisions Required by Law. Each and every provision of law and any clause required by law to be in the Agreement will be read and enforced as though it were included herein and, if through mistake or otherwise any such provision is not inserted, or is not correctly inserted, then upon the application of either party, the Agreement will promptly be physically amended to make such insertion or correction.

14.5 Severability. The provisions of this Agreement are severable to the extent that any provision or application held to be invalid by a Court of competent jurisdiction shall not affect any other provision or application of the Agreement which may remain in effect without the invalid provision or application.

14.6 Relationship of the Parties. It is clearly understood that each party will act in its individual capacity and not as an agent, employee, partner, joint venturer, or associate of the other. An employee or agent of one party shall not be deemed or construed to be the employee or agent of the other for any purpose whatsoever. The Consultant is advised that taxes or Social Security payments will not be withheld from any City payments issued hereunder and Consultant agrees to be fully and solely responsible for the payment of such taxes or any other tax applicable to this Agreement.

14.7 Entire Agreement; Interpretation; Parol Evidence. This Agreement represents the entire agreement of the parties with respect to its subject matter, and all previous agreements, whether oral or written, entered into prior to this Agreement are hereby revoked and superseded by this Agreement. No representations, warranties, inducements or oral agreements have been made by any of the parties except as expressly set forth herein, or in any other contemporaneous written agreement executed for the purposes of carrying out the provisions of this Agreement. This Agreement shall be construed and interpreted according to its plain meaning, and no presumption shall be deemed to apply in favor of, or against the party drafting the Agreement. The parties acknowledge and agree that each has had the opportunity to seek and utilize legal counsel in the drafting of, review of, and entry into this Agreement.

14.8 Assignment. No right or interest in this Agreement shall be assigned by Consultant without prior, written permission of the City signed by the City Manager and no delegation of any duty of Consultant shall be made without prior, written permission of the City signed by the City Manager. Any attempted assignment or delegation by Consultant in violation of this provision shall be a breach of this Agreement by Consultant.

14.9 Subcontracts. No subcontract shall be entered into by the Consultant with any other party to furnish any of the material or services specified herein without the prior written approval of the City. The Consultant is responsible for performance under this Agreement whether or not subcontractors are used.

14.10 Rights and Remedies. No provision in this Agreement shall be construed, expressly or by implication, as waiver by the City of any existing or future right and/or remedy available by law in the event of any claim of default or breach of this Agreement. The failure of the City to insist upon the strict performance of any term or condition of this Agreement or to exercise or delay the exercise of any right or remedy provided in this Agreement, or by law, or the City's acceptance of and payment for services, shall not release the Consultant from any responsibilities or obligations imposed by this Agreement or by law, and shall not be deemed a waiver of any right of the City to insist upon the strict performance of this Agreement.

14.11 Attorneys' Fees. In the event either party brings any action for any relief, declaratory or otherwise, arising out of this Agreement or on account of any breach or default hereof, the prevailing party shall be entitled to receive from the other party reasonable attorneys' fees and reasonable costs and expenses, determined by the court sitting without a jury, which shall be deemed to have accrued on the commencement of such action and shall be enforced whether or not such action is prosecuted through judgment.

14.12 Liens. All materials or services shall be free of all liens and, if the City requests, a formal release of all liens shall be delivered to the City.

14.13 Notices and Requests. Any notice or other communication required or permitted to be given under this Agreement shall be in writing and shall be deemed to have been duly given if (i) delivered to the party at the address set forth below, (ii) deposited in the U.S. Mail, registered or certified, return receipt requested, to the address set forth below, (iii) given to

a recognized and reputable overnight delivery service, to the address set forth below or (iv) delivered by facsimile transmission to the number set forth below:

If to the City:	City of Avondale 11465 West Civic Center Drive Avondale, Arizona 85323 Facsimile: 623-478-3802 Attn: Charles P. McClendon, City Manager
With copy to:	GUST ROSENFELD, P.L.C. 201 East Washington, Suite 800 Phoenix, Arizona 85004-2327 Facsimile: 602-340-1538 Attn: Andrew J. McGuire, Esq.
If to Consultant:	DMJM+Harris, Inc. 2777 East Camelback Road, Suite 200 Phoenix, Arizona 85016 Facsimile: (602) 337-2620 Attn: Ken Cole, PE

or at such other address, and to the attention of such other person or officer, as any party may designate in writing by notice duly given pursuant to this Section. Notices shall be deemed received (i) when delivered to the party, (ii) three business days after being placed in the U.S. Mail, properly addressed, with sufficient postage, (iii) the following business day after being given to a recognized overnight delivery service, with the person giving the notice paying all required charges and instructing the delivery service to deliver on the following business day, or (iv) when received by facsimile transmission during the normal business hours of the recipient. If a copy of a notice is also given to a party's counsel or other recipient, the provisions above governing the date on which a notice is deemed to have been received by a party shall mean and refer to the date on which the party, and not its counsel or other recipient to which a copy of the notice may be sent, is deemed to have received the notice.

14.14 Confidentiality of Records. The Consultant shall establish and maintain procedures and controls that are acceptable to the City for the purpose of ensuring that information contained in its records or obtained from the City or from others in carrying out its obligations under this Agreement shall not be used or disclosed by it, its agents, officers, or employees, except as required to perform Consultant's duties under this Agreement. Persons requesting such information should be referred to the City. Consultant also agrees that any information pertaining to individual persons shall not be divulged other than to employees or officers of Consultant as needed for the performance of duties under this Agreement.

14.15 Conflicting Terms. In the event of a conflict between the RFQ, the Consultant's response to the RFQ, the Scope of Work and this Agreement, the terms of this Agreement shall govern.

IN WITNESS WHEREOF, the parties hereto have executed this instrument as of the date and year first set forth above.

"**City**"

CITY OF AVONDALE, an Arizona municipal corporation

_____
Charles P. McClendon, City Manager

ATTEST:

_____
Linda M. Farris, City Clerk

"**Consultant**"

DMJM+HARRIS, INC.,
a New York corporation

By:_____

Name:_____

Its:_____

(ACKNOWLEDGEMENTS)

STATE OF ARIZONA)
) ss.
COUNTY OF MARICOPA)

This instrument was acknowledged before me on _____, 2006, by Charles P. McClendon, the City Manager of the CITY OF AVONDALE, an Arizona municipal corporation, on behalf of the City of Avondale.

_____
Notary Public in and for the State of Arizona

My Commission Expires:

_____

STATE OF ARIZONA)
) ss.
COUNTY OF MARICOPA)

This instrument was acknowledged before me on _____, 2006, by _____ as _____ of DMJM+HARRIS, INC., a New York corporation, on behalf of the corporation.

_____
Notary Public in and for the State of Arizona

My Commission Expires:

_____

EXHIBIT A
TO
PROFESSIONAL SERVICES AGREEMENT
BETWEEN
THE CITY OF AVONDALE
AND
DMJM+HARRIS, INC.

[Scope of Work]

See following pages.

Scope of Work for the Avondale Boulevard I-10 Intersection Project

This project will review the Avondale Boulevard I-10 intersection and recommend the lane configuration to widen Avondale Boulevard based on the City of Avondale Transportation Master Plan. The project limits will begin on Avondale Boulevard starting at Roosevelt Street and end approximately 750 feet north of the I-10 drainage channel. Because this section of Avondale Boulevard is within the ADOT right-of-way and access control, a Project Assessment (PA) will be required in the ADOT format to facilitate the ADOT approval of the project. The intention of this project is to widen Avondale Boulevard to three lanes in each direction with right-turn lanes, dual left-turn lanes in the southbound Avondale to eastbound I-10 direction and a single left-turn lane from northbound Avondale to westbound I-10 direction. The northbound Avondale right-turn lane will be constructed as an interim improvement. The design of the turn lane will be included in this project.

1. Data Collection and Field Reconnaissance

DMJM Harris will obtain the as-built plans, current construction plans and utility plans required for this project. It is anticipated that these reports will come from the City of Avondale, ADOT and local utility companies. DMJM Harris will perform a site investigation to verify information and note any changes.

2. Meetings

DMJM Harris will hold a kick-off meeting with the City of Avondale and ADOT to identify both design and coordination issues. Two additional coordination meetings will be held during the PA/Design process. DMJM Harris will also hold two comment resolution meetings after the 60% and the 95% Design submittals.

3. Survey

DMJM Harris will obtain the ADOT Mapping prepared for the I-10 study. DMJM Harris will survey the existing conditions to tie-in the mapping and to survey any new changes such as the new Hotel located on the south side of I-10 and the current roadway construction on the north side of I-10. DMJM Harris will also evaluate any proposed private developments adjacent to the project limits in order to ensure future compatibility with this project. The horizontal and vertical datum and control used for the ADOT I-10 project will be used for this project.

4. Traffic Report

Traffic counts including 24-hour counts and peak hour turning movement counts will be collected to establish the existing traffic patterns. This information will be used to analyze the existing intersection operations at Avondale Blvd and the

I-10 ramp intersections. DMJM Harris will obtain the MAG ADT traffic projections for 2030 that are being used for the basis of design on the I-10 widening project. DMJM Harris will compare the MAG traffic projections with the City of Avondale Transportation Master Plan and discuss with the City Transportation Staff. The projected MAG ADT volumes for Avondale Blvd will be reviewed against the existing traffic data to determine the growth percentage and compared to the future I-10 volumes. The future peak hour turning movements at the intersections of Avondale Blvd and the I-10 ramps will be developed using the existing factors and traffic distribution. Future peak hour traffic operational analyses, for the preferred alternative, will be performed to verify the recommended lane configurations and turn bay storage lengths for 2030 traffic volumes based on LOS D. DMJM Harris will prepare a Traffic Report in ADOT Format which will be submitted to the City of Avondale and ADOT for review and comment and for distribution.

5. AASHTO Controlling Design Criteria Report

DMJM Harris will prepare an AASHTO report on Avondale Boulevard to determine if the current roadway conforms to the AASHTO Controlling Design Criteria. Because this project will only widen Avondale Boulevard, the report will only review Avondale Boulevard from Roosevelt Street to approximately 750 feet north of the I-10 drainage channel. An Initial and Final Report will be prepared in the ADOT format, and will be submitted to the City of Avondale and ADOT for review and approval.

6. Geotechnical Investigation

As part of the ADOT I-10 study, AMEC is currently performing a geotechnical investigation at I-10 and Avondale Boulevard. DMJM Harris will utilize the resulting geotechnical report to furnish preliminary recommendations for new retaining walls constructed adjacent to the I-10 overpasses to accommodate the Avondale widening. This will determine the maximum width of Avondale Boulevard that could be widened without having to replace the existing I-10 Bridge.

DMJM Harris will also review the as-built plans for the bridge over the drainage channel north of I-10 and determine if additional geotechnical investigations are required for the final design. Any additional reports required will be listed in the Project Assessment.

7. Bridge Review

DMJM Harris will review the existing as-built plans for the drainage channel bridge. Based on the review, DMJM Harris will develop one viable alternative for widening the bridge structure that will include cost and traffic impacts.

As part of the Project Assessment, DMJM Harris will identify one feasible alternative for the drainage channel bridge structure with approximate costs.

8. Conceptual Intersection Design

DMJM Harris will utilize the survey, mapping as well as the information from the geotechnical investigation and the traffic report and the City of Avondale Transportation master Plan to design the intersection for the ultimate condition. The intersection will be designed to the City of Avondale and ADOT standards and will address roadway geometry, channelization, right-of-way, drainage, utility conflicts and signalization. The recommended intersection layout will be submitted to the City for review and approval.

9. Prepare Initial Project Assessment (IPA)

DMJM Harris will prepare an Initial Project Assessment Report in the ADOT format. The IPA will include the existing conditions; define the scope of the proposed improvements, site maps, preliminary plan sheets and a cost estimate. The scope of the PA will define the improvements necessary to widen Avondale Boulevard to its ultimate condition. It will also recommend an interim improvement of adding a right-turn lane (NB Avondale to I-10). This report will be submitted to the City of Avondale and ADOT Predesign for review prior to submitting it to all the team members for comment. The comments will be compiled and a comment resolution meeting will be held with all the team members to address the comments.

10. Prepare Final Project Assessment

The comments will be incorporated into the PA and the drawings, scope and cost estimate will be refined for the final Project Assessment. The PA will then be circulated to the City of Avondale and ADOT for Signatures

11. Right –Turn lane Plans

After the PA has been approved, DMJM Harris will prepare final design plans, special provisions and an Engineer's estimate to construct a right-turn lane from northbound Avondale Boulevard to eastbound I-10. The right-turn lane will be designed according to City of Avondale and ADOT standards.

This project will maintain the existing drainage patterns. Existing catch basins will be relocated to the new curb and gutter and connected to the existing system.

The existing utilities will be identified by as-built plans. The City and DMJM Harris will determine if utility locating and potholes are required. If potholes and locating are required to determine locations of the existing utilities, DMJM Harris

will locate the existing utilities and prepare a list of the required potholes. After the City approves the pothole list, DMJM Harris will pothole the identified utilities. A contract allowance 5 potholes (6' depth) is included

DMJM Harris will send plans to the utility companies to identify existing utilities and conflicts. DMJM Harris will hold two utility meetings to coordinate and reduce utility conflicts.

Lighting and signing and marking will be designed according to ADOT standards and the City of Avondale General Engineering Requirements. The existing lighting will be evaluated to determine the lighting requirements

The existing traffic signal in the southeast corner along with the signal and lighting controllers will be relocated to accommodate the new right-turn lane.

Electrical boxes located by the signal controller will also be relocated.

The specifications will require the contractor to prepare and submit Storm Water Pollution Prevention Plans.

The plans will be prepared using Microstation and at 1:20 scale. The plans will be submitted to the City and ADOT for review at the 30%, 60%, 95% and 100% stages. The submittals will include as follows:

60% 1 set of half size plans, Special Provisions and cost estimate. Electronic submittal in pdf format.

95% 1 set of half size plans, Special Provisions and cost estimate. Electronic submittal in pdf format.

100% 1 full size set of sealed plans printed on mylar.
1 set of sealed Special Provisions and a cost estimate
1 half size set of plans
Electronic submittal in pdf format.

The final approved design will be converted to AutoCAD and will be translated to the Cities horizontal and vertical datum for use in the City's GIS system.

Comments from the 60% and 95% submittals will be compiled and all comments and responses will be distributed to the project team.

12. Assumptions

The City will prepare all intergovernmental agreements required between the City and ADOT.

The pavement section will match the pavement section identified in the Pavement design reports for the Hotel project and the Avondale Boulevard Project north of I-10. A pavement design report is not included in this scope of work.

Traffic control will conform to the MUTCD and the Special Provisions. Traffic control plans will not be included in the design plans.

Landscaping plans are not included in this scope of work.

Horizontal and vertical datum and control points will be provided by the City of Avondale for use in converting to the GIS system.

The City of Avondale will determine if any utility companies have prior rights. The City will also prepare all required utility agreements.

Drainage, Lighting and Geotechnical reports are not included in the scope of work for this project.

SWPPP plans will not be included in the design plans. The special provisions will require the contractor to prepare and submit SWPPP plans.

Allowances are provided for potholes and legal descriptions. These allowances are based upon 5 potholes and I legal description.

Avondale Boulevard and I-10 Improvements

Activity	Finish Date
Notice to Proceed	January 1, 2007
Field Review / Kick off Meeting	January 10, 2007
Field Survey	January 25, 2007
Traffic Counts	January 26, 2005
AASHTO Report	January 30, 2007
Traffic Study	February 21, 2007
Submit Initial Project Assessment	March 14, 2007
City Review	March 28, 2007
Submit Summary of Comments and Responses	April 4, 2007
Submit Final Project Assessment	April 20, 2007
Submit 60% Right-Turn Lane Plans	May 18, 2007
City Review	June 1, 2007
Comment Resolution Meeting	June 8, 2007
Submit 95% Right-Turn Lane Plans	July 13, 2007
City Review	August 3, 2007
Comment Resolution Meeting	August 10, 2007
Submit Final Plans	August 31, 2007

EXHIBIT B
TO
PROFESSIONAL SERVICES AGREEMENT
BETWEEN
THE CITY OF AVONDALE
AND
DMJM+HARRIS, INC.

[Fee Estimate]

See following page.

DMJM HARRIS | AECOM

City of Avondale
Avondale Boulevard and I-10 Improvements
Derivation of Cost Proposal Summary
December 1, 2006

ESTIMATED LABOR:
(See attached Workhour Estimate)

Classification	Estimated Workhours	Average Hourly Rate	Labor Costs
Project Principal	1	$180.00	$180
Project Manager	65	$140.00	$9,100
QA/QC Engineer	12	$125.00	$1,500
Project Engineer	32	$125.00	$4,000
Engineer/Designer	282	$96.00	$27,072
Technician/Drafter	154	$78.00	$12,012
Secretary/Clerical	42	$64.00	$2,688
	588		

Total Estimated Labor: $ 56,552

ESTIMATED DIRECT EXPENSES TO BE BILLED AT NO MARK-UP:
(See Next Page for Itemized Summary)

TRAVEL	$356
PRINTING & REPRODUCTION	$324
MAILINGS & DELIVERIES	$300
TRAFFIC COUNTS	$1,456
Total Estimated Direct Expenses	**$ 2,436**

ESTIMATED OUTSIDE SERVICES AND CONSULTANTS:

AZTEC ENGINEERING	(Survey)	$ 6,480
Total Estimated Outside Services		**$ 6,480**
TOTAL ESTIMATED COST:		**$ 65,468**

ALLOWANCES:

AZTEC ENGINEERING	(Pothole Allowance 5 holes x $600)	$ 3,000
AZTEC ENGINEERING	(Legal Description Allowance, 1 Parce	$ 1,500
Design Allowance		$ 10,000
TOTAL ALLOWANCES:		**$ 14,500**
TOTAL CONTRACT		**$ 79,968**

CITY COUNCIL REPORT

SUBJECT:
Professional Service Agreement with Kimley-Horn & Associates, Inc. for Street Improvements of 4th Street from Lower Buckeye Road to Western Avenue

MEETING DATE:
December 18, 2006

TO: Mayor and Council

FROM: Carnell Thurman, P.E., City Engineer, (623) 478-3271

THROUGH: Charlie McClendon, City Manager

PURPOSE:

Staff is requesting that the City Council approve a Professional Service Agreement with Kimley-Horn & Associates Inc. to provide design services for street improvements on 4th Street from Lower Buckeye Road to Western Avenue in the amount of $114,915 and authorize the Mayor, or City Manager and City Clerk to execute the necessary documents.

BACKGROUND:

The approved 2006-2007 Capital Improvement Program (CIP) includes a project to design for mill and overlay construction of 4th Street from Lower Buckeye Road to Western Avenue (see vicinity map). The purpose of the project is to improve drainage, driving conditions, and the life expectancy of 4th Street.

This section of 4th Street is deteriorating. Although the pavement surface has received maintenance treatments in the past such as crack sealing and patching, extensive cracking continues. The pavement conditions are now at a point where routine maintenance measures are not enough. In order to extend the life of the road, some form of reconstruction is required.

Typically, a street mill and overlay lasts 5 to 10 years. To insure that this is the appropriate scope for the project, staff proposes that a geotechnical investigation be included in the design of the roadway to determine whether or not an overlay section will achieve an additional 5 to 10 years life expectancy. Other elements of the design address localized drainage conflicts including storm drains and curb and gutter replacements.

DISCUSSION:

The scope of service for this project will include:

- Design Survey
- Geotechnical Investigation / Pavement Analysis
- Geometric Analysis and Design
- Drainage Design
- Construction Plans, Specifications, and Estimates

SELECTION PROCESS:

Staff reviewed a list of pre-qualified firms and found Kimley-Horn & Associates Inc. to be the best qualified to provide engineering design consulting services for this project. Staff has contacted references and found that

Kimley-Horn & Associates Inc. is considered to be a competent, knowledgeable, and highly recommended consultant based on similar projects. Staff requested, received, and negotiated a proposal from Kimley-Horn & Associates Inc. for engineering services for the delivery of plans, specifications, and an engineer's estimate for 4th Street from Lower Buckeye Road to Western Avenue. Staff reviewed the proposal and negotiated the scope of services and contract price in the amount of $114,915 (see attached).

SCHEDULE:

Listed below is the tentative schedule for design and construction:

Design:
Notice to proceed – December 2006
Final Design – May 2007

Construction:
Bid award – June 2007
Begin Construction – June 2007
End Construction – January 2008

BUDGETARY IMPACT:

Funding for this project is available in the Street Fund Line Item No. 304-1147-00-8001 in the amount of $114,915.

RECOMENDATION:

Staff recommends that the City Council approve a Professional Design Services Agreement with Kimley-Horn & Associates Inc. to provide design services for street improvements on 4th Street from Lower Buckeye Road to Western Avenue in the amount of $114,915 and authorize the Mayor or City Manager and City Clerk to execute the necessary documents.

ATTACHMENTS:

Click to download

- Vicinity Map
- PSA

VICINITY MAP

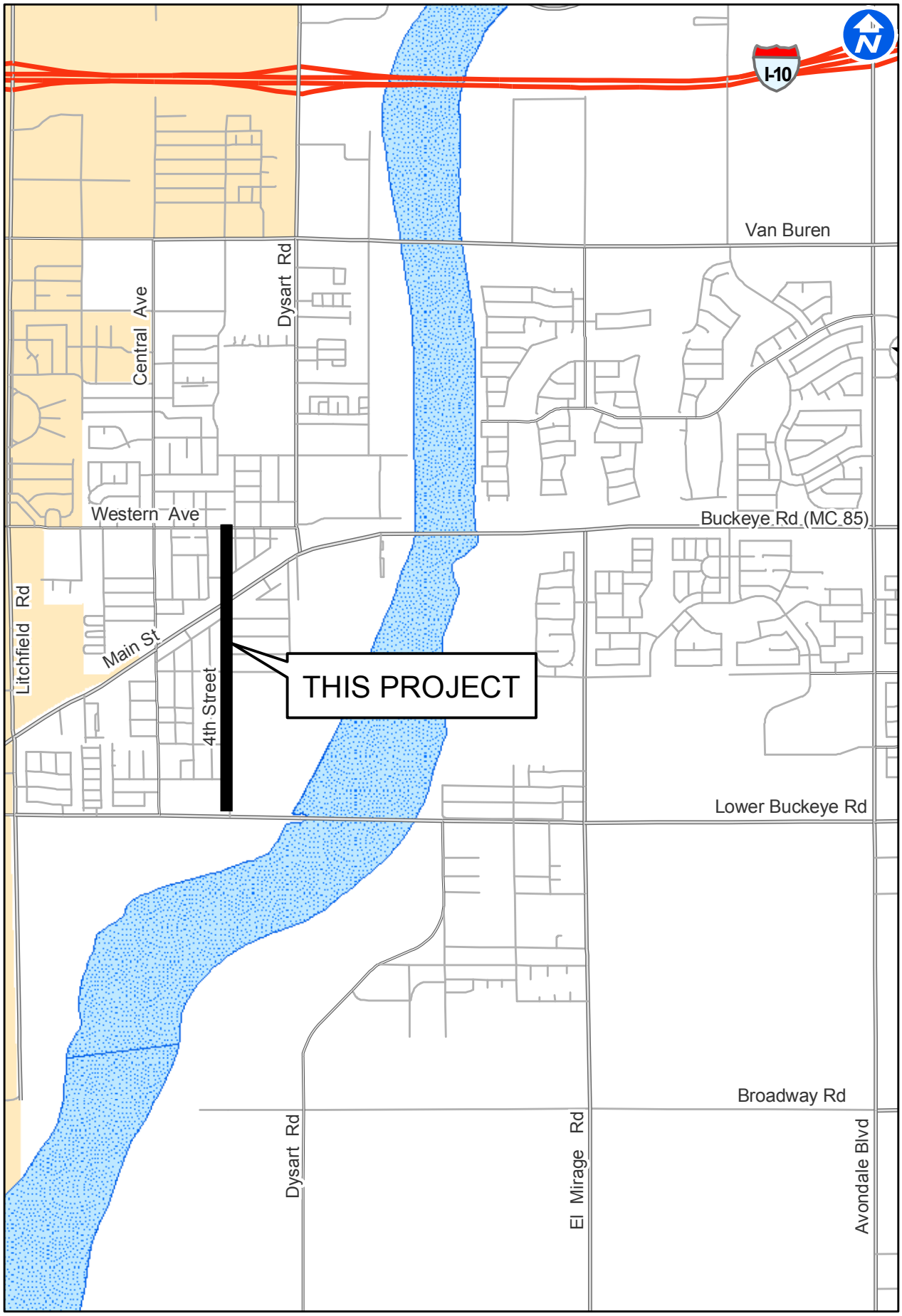

4th St Lower Buckeye to Western

PROFESSIONAL SERVICES AGREEMENT
BETWEEN
THE CITY OF AVONDALE
AND
KIMLEY-HORN AND ASSOCIATES, INC.

THIS PROFESSIONAL SERVICES AGREEMENT (this "Agreement") is made as of December 18, 2006, between the City of Avondale, an Arizona municipal corporation (the "City") and Kimley-Horn and Associates, Inc., a North Carolina corporation (the "Consultant").

RECITALS

A. The City issued a Request for Qualifications (the "RFQ") seeking statements of qualifications from Consultants for professional consulting services.

B. The Consultant responded to the RFQ and the City desires to enter into an Agreement with the Consultant for the 4th Street Rehabilitation Project (the "Services").

AGREEMENT

NOW, THEREFORE, in consideration of the foregoing recitals, which are incorporated herein by reference, and the following mutual covenants and conditions, the City and the Consultant hereby agree as follows:

1. Term of Agreement. This Agreement shall be effective as of the date first set forth above and shall remain in full force and effect until June 18, 2007.

2. Scope of Work. Consultant shall provide the Services as set forth in the Scope of Work, attached hereto as Exhibit A and incorporated herein by reference.

3. Compensation. The City shall pay Consultant a price not to exceed $114,915.00 for the Services as set forth in the Fee Estimate, attached hereto as Exhibit B and incorporated herein by reference.

4. Payments. The City shall pay the Consultant monthly, based upon work performed and completed to date, and upon submission and approval of invoices. All invoices shall document and itemize all work completed to date. The invoice statement shall include a record of time expended and work performed in sufficient detail to justify payment.

5. Documents. All documents prepared and submitted to the City pursuant to this Agreement shall be the property of the City.

6. Consultant Personnel. Consultant shall provide adequate, experienced personnel, capable of and devoted to the successful completion of the Services to be performed under this Agreement. Consultant agrees to assign specific individuals to key positions. Consultant agrees that, upon commencement of the Services to be performed under this Agreement, key personnel shall not be removed or replaced without prior written notice to the City. If key personnel are

not available to perform the Services for a continuous period exceeding 30 calendar days, or are expected to devote substantially less effort to the Services than initially anticipated, Consultant shall immediately notify the City of same and shall, subject to the concurrence of the City, replace such personnel with personnel of substantially equal ability and qualifications.

7. Inspection; Acceptance. All work shall be subject to inspection and acceptance by the City at reasonable times during Consultant's performance. The Consultant shall provide and maintain a self-inspection system that is acceptable to the City.

8. Licenses; Materials. Consultant shall maintain in current status all federal, state and local licenses and permits required for the operation of the business conducted by the Consultant. The City has no obligation to provide Consultant, its employees or subcontractors any business registrations or licenses required to perform the specific services set forth in this Agreement. The City has no obligation to provide tools, equipment or material to Consultant.

9. Performance Warranty. Consultant warrants that the Services rendered will conform to the requirements of this Agreement and to customary professional standards in the field.

10. Indemnification. To the fullest extent permitted by law, the Consultant shall indemnify, defend and hold harmless the City and each council member, officer, employee or agent thereof (the City and any such person being herein called an "Indemnified Party"), for, from and against any and all losses, claims, damages, liabilities, costs and expenses (including, but not limited to, reasonable attorneys' fees, court costs and the costs of appellate proceedings) to which any such Indemnified Party may become subject, under any theory of liability whatsoever ("Claims"), insofar as such Claims (or actions in respect thereof) relate to, arise out of, or are caused by or based upon the negligent acts, intentional misconduct, errors, mistakes or omissions, in connection with the work or services of the Consultant, its officers, employees, agents, or any tier of subcontractor in the performance of this Agreement. The amount and type of insurance coverage requirements set forth below will in no way be construed as limiting the scope of the indemnity in this Section.

11. Insurance.

11.1 General.

a. Insurer Qualifications. Without limiting any obligations or liabilities of Consultant, Consultant shall purchase and maintain, at its own expense, hereinafter stipulated minimum insurance with insurance companies duly licensed by the State of Arizona with an AM Best, Inc. rating of A- or above with policies and forms satisfactory to the City. Failure to maintain insurance as specified herein may result in termination of this Agreement at the City's option.

b. No Representation of Coverage Adequacy. By requiring insurance herein, the City does not represent that coverage and limits will be adequate to protect Consultant. The City reserves the right to review any and all of the insurance policies and/or endorsements cited in this Agreement but has no obligation to do so. Failure to

demand such evidence of full compliance with the insurance requirements set forth in this Agreement or failure to identify any insurance deficiency shall not relieve Consultant from, nor be construed or deemed a waiver of, its obligation to maintain the required insurance at all times during the performance of this Agreement.

c. Additional Insured. All insurance coverage and self-insured retention or deductible portions, except Workers' Compensation insurance and Professional Liability insurance, if applicable, shall name, to the fullest extent permitted by law for claims arising out of the performance of this Agreement, the City, its agents, representatives, officers, directors, officials and employees as Additional Insured as specified under the respective coverage sections of this Agreement.

d. Coverage Term. All insurance required herein shall be maintained in full force and effect until all work or services required to be performed under the terms of this Agreement are satisfactorily performed, completed and formally accepted by the City, unless specified otherwise in this Agreement.

e. Primary Insurance. Consultant's insurance shall be primary insurance with respect to performance of this Agreement and in the protection of the City as an Additional Insured.

f. Claims Made. In the event any insurance policies required by this Agreement are written on a "claims made" basis, coverage shall extend, either by keeping coverage in force or purchasing an extended reporting option, for three years past completion and acceptance of the services. Such continuing coverage shall be evidenced by submission of annual Certificates of Insurance citing applicable coverage is in force and contains the provisions as required herein for the three-year period.

g. Waiver. All policies, except for Professional Liability, including Workers' Compensation insurance, shall contain a waiver of rights of recovery (subrogation) against the City, its agents, representatives, officials, officers and employees for any claims arising out of the work or services of Consultant. Consultant shall arrange to have such subrogation waivers incorporated into each policy via formal written endorsement thereto.

h. Policy Deductibles and/or Self-Insured Retentions. The policies set forth in these requirements may provide coverage that contains deductibles or self-insured retention amounts. Such deductibles or self-insured retention shall not be applicable with respect to the policy limits provided to the City. Consultant shall be solely responsible for any such deductible or self-insured retention amount.

i. Use of Subcontractors. If any work under this Agreement is subcontracted in any way, Consultant shall execute written agreement with Subcontractor containing the indemnification provisions set forth in this Section and insurance requirements set forth herein protecting the City and Consultant. Consultant shall be responsible for executing the agreement with Subcontractor and obtaining certificates of insurance verifying the insurance requirements.

j. Evidence of Insurance. Prior to commencing any work or services under this Agreement, Consultant shall furnish the City with certificate(s) of insurance, or formal endorsements as required by this Agreement, issued by Consultant's insurer(s) as evidence that policies are placed with acceptable insurers as specified herein and provide the required coverages, conditions and limits of coverage specified in this Agreement and that such coverage and provisions are in full force and effect. If a certificate of insurance is submitted as verification of coverage, the City shall reasonably rely upon the certificate of insurance as evidence of coverage but such acceptance and reliance shall not waive or alter in any way the insurance requirements or obligations of this Agreement. If any of the above-cited policies expire during the life of this Agreement, it shall be Consultant's responsibility to forward renewal certificates within ten days after the renewal date containing all the aforementioned insurance provisions. Additionally certificates of insurance submitted without referencing a contract number will be subject to rejection and returned or discarded. Certificates of insurance shall specifically include the following provisions:

(1) The City, its agents, representatives, officers, directors, officials and employees are Additional Insureds as follows:

(a) Commercial General Liability - Under Insurance Services Office, Inc., ("ISO") Form CG 20 10 03 97 or equivalent.

(b) Auto Liability - Under ISO Form CA 20 48 or equivalent.

(c) Excess Liability - Follow Form to underlying insurance.

(2) Consultant's insurance shall be primary insurance as respects performance of the Agreement.

(3) All policies, except for Professional Liability, including Workers' Compensation, waive rights of recovery (subrogation) against City, its agents, representatives, officers, officials and employees for any claims arising out of work or services performed by Consultant under this Agreement.

(4) A 30-day advance notice cancellation provision. If ACORD certificate of insurance form is used, the phrases in the cancellation provision "endeavor to" and "but failure to mail such notice shall impose no obligation or liability of any kind upon the company, its agents or representatives" shall be deleted. Certificate forms other than ACORD form shall have similar restrictive language deleted.

11.2 Required Insurance Coverage.

a. Commercial General Liability. Consultant shall maintain "occurrence" form Commercial General Liability insurance with an unimpaired limit of not less than $1,000,000 for each occurrence, $2,000,000 Products and Completed Operations Annual Aggregate and a $2,000,000 General Aggregate Limit. The policy shall cover liability arising from premises, operations, independent contractors, products-completed operations, personal injury and advertising injury. Coverage under the policy will be at least as broad as ISO policy form CG 00 010 93 or equivalent thereof, including but not limited to, separation of insured's clause. To the fullest extent allowed by law, for claims arising out of the performance of this Agreement, the City, its agents, representatives, officers, officials and employees shall be cited as an Additional Insured under ISO, Commercial General Liability Additional Insured Endorsement form CG 20 10 03 97, or equivalent, which shall read "Who is an Insured (Section II) is amended to include as an insured the person or organization shown in the Schedule, but only with respect to liability arising out of "your work" for that insured by or for you." If any Excess insurance is utilized to fulfill the requirements of this subsection, such Excess insurance shall be "follow form" equal or broader in coverage scope than underlying insurance.

b. Vehicle Liability. Consultant shall maintain Business Automobile Liability insurance with a limit of $1,000,000 each occurrence on Consultant's owned, hired and non-owned vehicles assigned to or used in the performance of the Consultant's work or services under this Agreement. Coverage will be at least as broad as ISO coverage code "1" "any auto" policy form CA 00 01 12 93 or equivalent thereof. To the fullest extent allowed by law, for claims arising out of the performance of this Agreement, the City, its agents, representatives, officers, directors, officials and employees shall be cited as an Additional Insured under ISO Business Auto policy Designated Insured Endorsement form CA 20 48 or equivalent. If any Excess insurance is utilized to fulfill the requirements of this subsection, such Excess insurance shall be "follow form" equal or broader in coverage scope than underlying insurance.

c. Professional Liability. If this Agreement is the subject of any professional services or work, or if the Consultant engages in any professional services or work adjunct or residual to performing the work under this Agreement, the Consultant shall maintain Professional Liability insurance covering negligent errors and omissions arising out of the Services performed by the Consultant, or anyone employed by the Consultant, or anyone for whose negligent acts, mistakes, errors and omissions the Consultant is legally liable, with an unimpaired liability insurance limit of $2,000,000 each claim and $2,000,000 all claims. In the event the Professional Liability insurance policy is written on a "claims made" basis, coverage shall extend for three years past completion and acceptance of the Services, and the Project Manager shall be required to submit certificates of insurance evidencing proper coverage is in effect as required above.

d. Workers' Compensation Insurance. Consultant shall maintain Workers' Compensation insurance to cover obligations imposed by federal and state

statutes having jurisdiction of Consultant's employees engaged in the performance of work or services under this Agreement and shall also maintain Employers Liability Insurance of not less than $500,000 for each accident, $500,000 disease for each employee and $1,000,000 disease policy limit.

11.3 Cancellation and Expiration Notice. Insurance required herein shall not expire, be canceled, or materially changed without 30 days' prior written notice to the City.

12. Applicable Law; Venue. In the performance of this Agreement, Consultant shall abide by and conform to any and all laws of the United States, State of Arizona and City of Avondale, including but not limited to, federal and state executive orders providing for equal employment and procurement opportunities, the Federal Occupational Safety and Health Act and any other federal or state laws applicable to this Agreement. This Agreement shall be governed by the laws of the State of Arizona and suit pertaining to this Agreement may be brought only in courts in the State of Arizona.

13. Termination; Cancellation.

13.1 For City's Convenience. This Agreement is for the convenience of the City and, as such, may be terminated without cause after receipt by Consultant of written notice by the City. Upon termination for convenience, Consultant shall be paid for all undisputed services performed to the termination date.

13.2 For Cause. This Agreement may be terminated by either party upon 30 days' written notice should the other party fail to substantially perform in accordance with this Agreement's terms, through no fault of the party initiating the termination. In the event of such termination for cause, payment shall be made by the City to the Consultant for the undisputed portion of its fee due as of the termination date.

13.3 Due to Work Stoppage. This Agreement may be terminated by the City upon 30 days' written notice to Consultant in the event that the Services are permanently abandoned. In the event of such termination due to work stoppage, payment shall be made by the City to the Consultant for the undisputed portion of its fee due as of the termination date.

13.4 Conflict of Interest. This Agreement is subject to the provisions of ARIZ. REV. STAT. § 38-511. The City may cancel this Agreement without penalty or further obligations by the City or any of its departments or agencies if any person significantly involved in initiating, negotiating, securing, drafting or creating this Agreement on behalf of the City or any of its departments or agencies is, at any time while the Agreement or any extension of the Agreement is in effect, an employee of any other party to the Agreement in any capacity or a Consultant to any other party of the Agreement with respect to the subject matter of the Agreement.

13.5 Gratuities. The City may, by written notice to the Consultant, cancel this Agreement if it is found by the City that gratuities, in the form of entertainment, gifts or otherwise, were offered or given by the Consultant or any agent or representative of the Consultant to any officer, agent or employee of the City for the purpose of securing this

Agreement. In the event this Agreement is cancelled by the City pursuant to this provision, the City shall be entitled, in addition to any other rights and remedies, to recover or withhold from the Consultant an amount equal to 150% of the gratuity.

14. Miscellaneous.

14.1 Independent Contractor. The Consultant acknowledges and agrees that the Services provided under this Agreement are being provided as an independent contractor, not as an employee or agent of the City. Consultant, its employees and subcontractors are not entitled to workers' compensation benefits from the City. The City does not have the authority to supervise or control the actual work of Consultant, its employees or subcontractors. The Consultant, and not the City, shall determine the time of its performance of the services provided under this Agreement so long as Consultant meets the requirements of its agreed scope of work as set forth in Section 2 above. Consultant is neither prohibited from entering into other contracts nor prohibited from practicing its profession elsewhere. City and Consultant do not intend to nor will they combine business operations under this Agreement.

14.2 Laws and Regulations. The Consultant shall keep fully informed and shall at all times during the performance of its duties under this Agreement ensure that it and any person for whom the Consultant is responsible remains in compliance with all rules, regulations, ordinances, statutes or laws affecting the Services, including the following: (i) existing and future City and County ordinances and regulations, (ii) existing and future state and federal laws and (iii) existing and future Occupational Safety and Health Administration ("OSHA") standards.

14.3 Amendments. This Agreement may be modified only by a written amendment signed by persons duly authorized to enter into contracts on behalf of the City and the Consultant.

14.4 Provisions Required by Law. Each and every provision of law and any clause required by law to be in the Agreement will be read and enforced as though it were included herein and, if through mistake or otherwise any such provision is not inserted, or is not correctly inserted, then upon the application of either party, the Agreement will promptly be physically amended to make such insertion or correction.

14.5 Severability. The provisions of this Agreement are severable to the extent that any provision or application held to be invalid by a Court of competent jurisdiction shall not affect any other provision or application of the Agreement which may remain in effect without the invalid provision or application.

14.6 Relationship of the Parties. It is clearly understood that each party will act in its individual capacity and not as an agent, employee, partner, joint venturer, or associate of the other. An employee or agent of one party shall not be deemed or construed to be the employee or agent of the other for any purpose whatsoever. The Consultant is advised that taxes or Social Security payments will not be withheld from any City payments issued hereunder and Consultant agrees to be fully and solely responsible for the payment of such taxes or any other tax applicable to this Agreement.

14.7 Entire Agreement; Interpretation; Parol Evidence. This Agreement represents the entire agreement of the parties with respect to its subject matter, and all previous agreements, whether oral or written, entered into prior to this Agreement are hereby revoked and superseded by this Agreement. No representations, warranties, inducements or oral agreements have been made by any of the parties except as expressly set forth herein, or in any other contemporaneous written agreement executed for the purposes of carrying out the provisions of this Agreement. This Agreement shall be construed and interpreted according to its plain meaning, and no presumption shall be deemed to apply in favor of, or against the party drafting the Agreement. The parties acknowledge and agree that each has had the opportunity to seek and utilize legal counsel in the drafting of, review of, and entry into this Agreement.

14.8 Assignment. No right or interest in this Agreement shall be assigned by Consultant without prior, written permission of the City signed by the City Manager and no delegation of any duty of Consultant shall be made without prior, written permission of the City signed by the City Manager. Any attempted assignment or delegation by Consultant in violation of this provision shall be a breach of this Agreement by Consultant.

14.9 Subcontracts. No subcontract shall be entered into by the Consultant with any other party to furnish any of the material or services specified herein without the prior written approval of the City. The Consultant is responsible for performance under this Agreement whether or not subcontractors are used.

14.10 Rights and Remedies. No provision in this Agreement shall be construed, expressly or by implication, as waiver by the City of any existing or future right and/or remedy available by law in the event of any claim of default or breach of this Agreement. The failure of the City to insist upon the strict performance of any term or condition of this Agreement or to exercise or delay the exercise of any right or remedy provided in this Agreement, or by law, or the City's acceptance of and payment for services, shall not release the Consultant from any responsibilities or obligations imposed by this Agreement or by law, and shall not be deemed a waiver of any right of the City to insist upon the strict performance of this Agreement.

14.11 Attorneys' Fees. In the event either party brings any action for any relief, declaratory or otherwise, arising out of this Agreement or on account of any breach or default hereof, the prevailing party shall be entitled to receive from the other party reasonable attorneys' fees and reasonable costs and expenses, determined by the court sitting without a jury, which shall be deemed to have accrued on the commencement of such action and shall be enforced whether or not such action is prosecuted through judgment.

14.12 Liens. All materials or services shall be free of all liens and, if the City requests, a formal release of all liens shall be delivered to the City.

14.13 Notices and Requests. Any notice or other communication required or permitted to be given under this Agreement shall be in writing and shall be deemed to have been duly given if (i) delivered to the party at the address set forth below, (ii) deposited in the U.S. Mail, registered or certified, return receipt requested, to the address set forth below, (iii) given to

a recognized and reputable overnight delivery service, to the address set forth below or (iv) delivered by facsimile transmission to the number set forth below:

If to the City:	City of Avondale 11465 West Civic Center Drive Avondale, Arizona 85323 Facsimile: 623-478-3802 Attn: Charles P. McClendon, City Manager
With copy to:	GUST ROSENFELD, P.L.C. 201 East Washington, Suite 800 Phoenix, Arizona 85004-2327 Facsimile: 602-340-1538 Attn: Andrew J. McGuire, Esq.
If to Consultant:	Kimley-Horn and Associates, Inc. 7878 North 16th Street, Suite 300 Phoenix, Arizona 85020 Facsimile:_____ Attn: Raj Christian, PE

or at such other address, and to the attention of such other person or officer, as any party may designate in writing by notice duly given pursuant to this Section. Notices shall be deemed received (i) when delivered to the party, (ii) three business days after being placed in the U.S. Mail, properly addressed, with sufficient postage, (iii) the following business day after being given to a recognized overnight delivery service, with the person giving the notice paying all required charges and instructing the delivery service to deliver on the following business day, or (iv) when received by facsimile transmission during the normal business hours of the recipient. If a copy of a notice is also given to a party's counsel or other recipient, the provisions above governing the date on which a notice is deemed to have been received by a party shall mean and refer to the date on which the party, and not its counsel or other recipient to which a copy of the notice may be sent, is deemed to have received the notice.

14.14 Confidentiality of Records. The Consultant shall establish and maintain procedures and controls that are acceptable to the City for the purpose of ensuring that information contained in its records or obtained from the City or from others in carrying out its obligations under this Agreement shall not be used or disclosed by it, its agents, officers, or employees, except as required to perform Consultant's duties under this Agreement. Persons requesting such information should be referred to the City. Consultant also agrees that any information pertaining to individual persons shall not be divulged other than to employees or officers of Consultant as needed for the performance of duties under this Agreement.

14.15 Conflicting Terms. In the event of a conflict between the RFQ, the Consultant's response to the RFQ, the Scope of Work, the Fee Estimate and this Agreement, the terms of this Agreement shall govern.

IN WITNESS WHEREOF, the parties hereto have executed this instrument as of the date and year first set forth above.

"**City**"	"**Consultant**"
CITY OF AVONDALE, an Arizona municipal corporation	KIMLEY-HORN AND ASSOCIATES, INC., a North Carolina corporation
_____	By:_____
Charles P. McClendon, City Manager	
ATTEST:	Name:_____
_____	Its:_____
Linda M. Farris, City Clerk	

(ACKNOWLEDGEMENTS)

STATE OF ARIZONA)
) ss.
COUNTY OF MARICOPA)

This instrument was acknowledged before me on _____, 2006, by Charles P. McClendon, the City Manager of the CITY OF AVONDALE, an Arizona municipal corporation, on behalf of the City of Avondale.

_____
Notary Public in and for the State of Arizona

My Commission Expires:

_____

STATE OF ARIZONA)
) ss.
COUNTY OF MARICOPA)

This instrument was acknowledged before me on _____, 2006, by ____ _____ as _____ of KIMLEY-HORN AND ASSOCIATES, INC., a North Carolina corporation, on behalf of the corporation.

_____
Notary Public in and for the State of Arizona

My Commission Expires:

_____

EXHIBIT A
TO
PROFESSIONAL SERVICES AGREEMENT
BETWEEN
THE CITY OF AVONDALE
AND
KIMLEY-HORN AND ASSOCIATES, INC.

[Scope of Work]

See following pages.

City of Avondale
4th Street Rehabilitation Project
Lower Buckeye Road to Western Ave.
Scope of Services

Introduction

The scope of services to be provided for the City of Avondale 4th Street Rehabilitation Project by the Kimley-Horn and Associates (KHA) Team includes: project management and administration as it relates to the consultant team and coordination with the City's staff and resources; engineering analysis, technical study, and design necessary for the preparation of plans, specifications and estimates (PS&E); the production of construction contract documents; and support during bidding of the project. The following is a detailed summary of the scope of these services.

Assumptions

A. The project begins at the northerly leg of 4th Street / Lower Buckeye Road Intersection and extends to the southerly leg of the 4th Street / Western Avenue Intersection. The project will include improvements around the curb returns on all side streets except for the intersection of 4th Street / Main Street intersection at which the project will conform at the southerly curb return and will begin again at the northerly curb return.

B. Traffic studies will not be required, existing lane configurations and storage bays will be maintained.

C. KHA and our subconsultants shall not be responsible for the discovery, presence, handling, removal, disposal of hazardous materials at the Project Site.

D. Existing improvements of adjacent properties (curb, gutter, sidewalk and landscaping) will be preserved. The project will conform to existing curb and gutter sections as directed by the City.

E. No off-site drainage studies will be performed.

F. The City will provide a copy of all available plans, reports, and/or maps.

G. Limited storm drain improvements will be included in this scope of services, which may include:

   a. Some underground storm drain improvements – storm drain runs up to one quarter mile. Subsurface improvements will be limited to connections to existing storm drain facilities located in Lower Buckeye Road and/or Main Street (MC85), providing local catch basins at roadway ponding areas, and possibly connecting roadway drainage to discharge to local subdivision detention basins.

   b. "Minor" surface drainage improvements shall consist of reconstructing gutter grades to provide for positive flow, installing valley gutters to drain intersections, etc. A budget of $10,000 has been allocated for additional reconstruction/drainage design if needed.

H. New water services connecting to existing water meters shall be included in the project plans.

I. New sewer service shall be provided at undeveloped parcels throughout the project corridor.

J. Traffic signal design is not included in this scope of services, outside of replacement of traffic loops.

K. All plans shall be prepared using AutoCAD; release to be compatible with that in use by City.

L. The plans and special provisions shall be prepared in conformance with City of Avondale standards and/or MAG. Imperial units shall be utilized on all documents.
M. Bid items will use City standard pay items and numbering.
N. Acquisition of permits, including but not limited to UPRR permits, is not included in the agreement. The City will coordinate the project with the Union Pacific Rail Road (UPRR) if needed.
O. City of Avondale encroachment fees shall be waived.
P. Public meetings are not included in this scope of services.
Q. Landscape design is not included in this scope of services.
R. Traffic control plans are not included in this scope of service.
S. Utility relocation design is not included in this scope of services. Minor utility adjustments for storm drain connectors will be included in the plans
T. No environmental work is anticipated for this project and not included in this scope.
U. No new right-of-way or easements will be required for this project.
V. KHA will prepare striping plans.

Task 1 – Project Management

KHA will perform project management-related tasks through the duration of the project. The project duration will be of six months. The tasks will include:

- Defining key issues and goals and coordinating responsibilities of project team members
- Holding a project kick-off meeting and a field review with the City to initiate the project.
- Holding as needed Project Development Team (PDT) coordination and status meetings; preparing agenda, meeting minutes, and action items. This scope of services includes two meetings.
- Coordinate the work of the subconsultants, the City, and others.
- Perform Quality Assurance of all deliverables

Task 1 Deliverables:

- Kick-off Meeting (utility stakeholders will be included)
- PDT Meetings (up to two)
- Monthly Invoices

Task 2 – Survey and Mapping

KHA will commission their sub consultant, ***Horizon*** to perform topographic field surveys, research and develop base plans to the same scale as the final plans. Neither topographic aerial surveys nor aerial photographs will be used as the sole basis of the base plans.

All survey work will be in Standard English units and conform to City Standards. The base plan will be drawn at a 1”=20’.

In general, the width of the mapping corridor will be from R/W to R/W of the roadway. Roadway cross sections will be surveyed at 100-foot intervals. In

addition we will survey 100-feet along each intersecting cross street in order to evaluate existing drainage patterns, and to roadway transitions to existing facilities. The survey will consist of the following streets and lengths including the Union Pacific Railroad crossing.

Major Streets

1.	4th Street from Lower Buckeye to 100' North of Western Avenue	= 5,380'
2.	(M.C. 85) Main Street (East and West)	= 300'
	Subtotal Major Streets	= 5,680 L.F.

Local Streets

3.	Elm Lane (West only)	= 100'
4.	Mountain View Drive (West only)	= 100'
5.	Whyman Avenue (East only)	= 100'
6.	Harrison Drive (East and West)	= 200'
7.	Randy Street (East only)	= 100'
8.	Dee Street (East only)	= 100'
9.	Doris Street (East only)	= 100'
10.	Brooke Place (West only)	= 100'
11.	Pacific Drive (East and West)	= 200'
12.	Belmont Drive (East only)	= 100'
	Subtotal Local Streets	= 1,200 L.F.

Railroad Crossing

13.	Union Pacific Railroad Crossing	= 300'
	Total Length for Surveys	= 7,180 L.F. =1.36 Miles

The base mapping will locate roadway features; conform areas; fences; walls; driveways; surface evidence of utilities; storm drain manhole and catch basin pipe sizes and invert elevations; sanitary sewer manhole pipe sizes and invert elevations; drainage structures; signs; poles; streetlights; and other pertinent improvements.

KHA will provide the City with a hardcopy and electronic copy of the project survey file, which will include existing contours, key spot elevations, and existing R/W.

Task 2 Deliverables:

- Project Base Mapping

Task 3 – Project Research and Coordination

KHA will research the project in order to supplement the project base plans and develop engineering studies in conjunction with Task 4. The investigation will include record plan research and field investigations.

Task 3.1 – Record Plan Research / Data Collection

KHA will obtain plans or reports as required through the City of Avondale, Maricopa County DOT, and Maricopa County Flood Control District, included but not limited to:

- Drainage reports and studies from local subdivisions
- Drainage studies on file with the City of Avondale
- Area drainage master plans from Flood Control District
- Hydrology models in electronic format from Flood Control
- Drainage reports from ADOT

Task 3.2 – Field Investigations

KHA will physically walk the project site. The project review will be used to visually evaluate any noticeable or potential roadway design and construction issues, including grading conflicts, drainage issues, utility conflicts, etc.

Task 3.3 – Utility Coordination

KHA will coordinate this project with the utility companies. The following is a description of how we will coordinate with the utilities, including relocations, through the project:

Utility Mapping. KHA will send Utility Information Request Letters to all applicable utility companies, requesting current as-builts, schematic maps, etc. of their facilities within the project boundaries. Based on the utility response, we will prepare a utility mapping of the corridor.

Utility Conflicts Map. We will prepare a utility conflict map showing the proposed roadway geometrics superimposed on an existing roadway base map, including both surface and sub-surface utilities. Utility conflicts will be noted on the map and distributed to the utility companies. The utility conflict map will be updated at the 90% and 100% project milestones.

Utility Coordination Meetings. We will coordinate and attend utility coordination meetings. One meeting is anticipated after the 90% plans have been sent out and one meeting in the field during the process of the project, to discuss utility relocation solutions and options, if necessary.

60% Plans. 60% plans and utility information forms will be sent to all applicable utility companies following the 60% plan submittal. The 60% plans will be clearly marked as such and will identify potential conflicts with utility facilities.

90% Plans. We will forward 90% plans to the utility companies or agencies and outline, in writing, any changes made since releasing 60% plans. We will contact the utility companies whose facilities are in conflict with the proposed work and ascertain when any necessary relocation work will be completed.

Utility Potholing. Potholing shall be an allowance item and potholes will need to be approved by the city prior to the work. KHA will prepare a pothole plan and get it approved by the City. The KHA team will coordinate required potholes with the respective owner. A budget of $8,000 has been allocated for utility potholing.

Preparation and execution of utility agreements is not included in this scope of work.

Task 3 Deliverables:

- Utility Request Letters
- Field Notes
- Utility Potholing
- Utility conflict map
- Utility coordination meeting (in field) as necessary)
- Utility clearance letters from utility stakeholders (City will provide a template)

Task 4 –Preliminary Engineering Reports and Plans

Task 4.1 Roadway Drainage Report

Conduct an onsite drainage study for the proposed roadway improvements. Minor adjustments will be made to the profile of the existing roadway. Determine onsite drainage areas and estimate onsite drainage flows using City engineering standards. Conduct site visit to 4th Street to observe segments with curb and gutter, valley gutters, ponding areas, existing drainage facilities, and retention basins.

Drainage improvements are limited to minor storm drain and catch basins to tie to existing facilities (if the existing facilities have capacity and is approved by jurisdiction owning the facility), and potentially tying into local subdivision detention basins. KHA will prepare a construction cost analysis and provide recommendations to the City.

Task 4.2 – Geotechnical Investigation

KHA will utilize ***Speedie and Associates*** to conduct a geotechnical investigation, provide an evaluation of existing pavement conditions, and provide pavement design recommendations.

Speedie will drill and sample sufficient test borings to adequately determine asphalt and subsoil conditions and provide samples for laboratory testing. Traffic control, City of Avondale permit and asphalt coring are anticipated. Sufficient laboratory tests will be conducted to properly classify the soils encountered and provide data for engineering design. Speedie will mark the borings in the field and arrange for Blue stake Clearance. Speedie anticipates coring and drilling the following borings:

Location	Improvements	Number	Depth, ft
4th Street	Roadway Rehab	5	5

All subgrade borings will be drilled with a jeep mounted auger rig to the depths indicated in the table above, below existing ground surface, or refusal, whichever comes first. Access to the site by conventional jeep mounted drilling equipment is assumed to be free and unencumbered.

Speedie will prepare a report presenting all data obtained, together with our conclusions and recommendations. The report will address the site condition(s), and make recommendations for repair including removal and replacement (complete or partial), crack repair, overlay and/or slurry/fog seal. We will also provide specifications for the repair options/materials (not including striping).

Task 4.3 Preliminary Plans & Estimate (60% P&E)

KHA will prepare preliminary plans. The plans, at a minimum, shall address the following:

- Horizontal and vertical alignments
- 4th Street typical sections
- Intersections conform geometrics
- Drainage facilities
- Project constraints, including utility facilities, right-of-way, driveway access, etc.
- Proposed improvements and the existing R/W

The KHA team will prepare a preliminary itemized engineer's estimate of the project construction costs.

Task 4 Deliverables:

- Final Roadway Drainage Report (4 copies)
- Final Geotechnical Report (4 copies)
- Preliminary Plans & Estimate (4 copies)

Task 5 – Final Design (Preparation of PS&E)

KHA will prepare detailed design for the project, and produce the construction drawings, technical special provisions, and estimate of probable construction costs for the contract documents. The Plans, Specifications and Estimate (PS&E) will be prepared in accordance with the criteria established in the 60% PS&E and the City's policies, procedures, manuals, and standards.

We will prepare the technical special provisions, to be incorporated into the City's general specifications.

Submittals will be made to the City at 90%, and 100% completion phases. The KHA team will facilitate the review and revision of the PS&E package. Each submittal will include six (6) sets (four half-size (11"x17") sets of drawings, two (2) full size (22"x34") and the "red lined" set of plans with written responses to the City's comments from the previous submittal. The KHA team will submit a final complete reproducible set of PS&E and the CAD files. Improvement plan sheets will be on reversible Mylar.

An estimated sheet break down per submittal is as follows, based on a design scale of 1”=20’:

Sheet Description	60%	90%	100% (Final)
Title sheet	1	1	1
Key Map / Typical Sections	1	1	1
Layout / Storm Drain Plans [Plan & Profile]	12	12	12
Storm Drain Lateral Profiles	1	1	1
Pavement Marking Plans	3	3	3
Estimated total number of sheets	18	18	18

Title Sheet – 1 sheet

The title sheet will be provided by the City and may include:

- Project Name
- Index of Sheets
- Vicinity and Location Maps
- Utility contacts and telephone numbers
- Signature blocks (as needed)
- Street names

Key Map / Typical Sections – 1 sheet

A project key map will be prepared at a scale of 1”=100’ for the project and will include:

- Graphical representations of the location and limits of each sheet
- Roadway centerline and stationing
- Roadway centerline control (Basis of Bearing / Project Benchmark)
- Street monument locations
- Right-of-way, adjacent properties identified by parcel number and property owner
- Street names

Roadway typical sections will be prepared for 4th Street and will include:

- Roadway dimensions (based on the roadway centerline) including:
  - Edge of pavement

  - Traffic lanes
  - Sidewalk
  - Right-of-Way
- Pavement structural section (existing and recommended)
- Limits or location of typical section (station limits, street name, etc.)

Layout / Storm Drain Plans (Plan and Profile) – 12 sheets

Plan and profile sheets will be prepared at a scale of 1”=20’ (horizontal) and 1”=2’ (vertical), based on the City-approved base plans. The plans will include:

- Roadway centerline stationing
- Right-of-way and adjacent properties identified by parcel number and property owner
- Limits of improvements/construction/grading
- Construction notes and callouts
- Street names
- Horizontal control (curve tables, station/offset labels on all horizontal angle points, etc.)
- Roadway centerline profile grade (slopes, vertical curves, spot elevations every 50-feet and at critical locations (i.e., high/low points, grade breaks, etc.)
- Utility locations and label utilities requiring relocation
- Water service / meter locations
- Sewer service locations, lateral slopes, upper inverts elevations, other details necessary to construct
- New storm drain profiles including:
  - Storm drain inlet, and manholes based on roadway station and offset,
  - Diameter of pipe,
  - Pipe material,
  - Profile of storm drain (slope and spot elevations every 50-feet),
  - Hydraulic grade line,
  - Length of pipe runs,
  - Clearance with crossing utilities

Storm Drain Lateral Profile – 1 sheet

Profile sheets will be prepared at a scale of 1”=2’ (vertical) based on the lateral locations as defined in the City approved drainage study and the project plans. The profiles will include:

- Storm drain inlet, and manholes based on roadway station and offset,
- Diameter of pipe,
- Pipe material,
- Profile of storm drain (slope and spot elevations every 50-feet),
- Hydraulic grade line,
- Length of pipe runs,
- Clearance with crossing utilities

Pavement Marking Plans – 3 sheets

The plans will include:

- Limits of improvements/construction
- Street names
  - Pavement delineation including:
  - Striping/Signing notes and callouts
  - Limits of striping improvements
  - Lane dimensions
  - Location of pavement legends
  - Location of roadside signs and designation
  - Pavement striping detail and legend schedule

Task 5.1 – 90% PS&E

Upon approval of the 60% plans; roadway plans, profile, and detail sheets will be prepared for the 90% submittal. These plans will include all details necessary to construct the roadway, including grading, drainage, pavement, etc. The roadway centerline will be shown and stationed. Plans will include outline technical special provisions, a summary of construction quantities and an estimate of cost.

Comments from this submittal will be incorporated into the 90% Plans.

Task 5.2 – 100% FINAL PS&E

After review of the 90% plans, all comments will be incorporated into the 100% FINAL PS&E.

Task 5 Deliverables:

- 90% PS&E (6 copies)
- 100% FINAL PS&E (6 copies)

Task 6 — Bidding Assistance

In this task, the KHA team will provide assistance, as required, to the City during bidding of the project. We will provide the City an electronic copy of the project contract documents in AutoCAD format and specifications in MS Word format. Our team will also attend the pre-bid meeting and provide technical assistance to City staff during the bidding phase. In addition, the KHA team will be available to answering questions from prospective bidders, assisting the City in the preparation of any required addenda to the PS&E during the advertisement period, and providing consultation and interpretation of the construction documents.

Task 6 Deliverables:

- Electronic copy of the contract documents (AutoCAD format compatible with release in use by City and MS Word format as necessary)
- Attendance at the pre-bid meeting
- Other assistance as necessary

Horizon
Consultants
of
Arizona

AGREEMENT BETWEEN CLIENT AND SURVEYOR FOR PROFESSIONAL SERVICES

THIS IS AN AGREEMENT MADE AS OF NOVEMBER 1, 2006 BETWEEN

HORIZON CONSULTANTS OF ARIZONA, THE SURVEYOR

AND

KIMLEY-HORN & ASSOCIATES, THE CLIENT

PROJECT NAME: 4th STREET, LOWER BUCKEYE TO WESTERN AVE.

PROPOSAL NUMBER: P3642

ATTN: RAJ CHRISTIAN

HORIZON CONSULTANTS OF ARIZONA IS PLEASED TO SUBMIT THIS PROPOSAL FOR PROFESSIONAL LAND SURVEYING SERVICES FOR THE ABOVE REFERENCED PROJECT.

TOPOGRAPHIC SURVEY

PROVIDE TOPOGRAPHIC SURVEY FOR AREA ALONG 4TH STREET FROM LOWER BUCKEYE ROAD TO WESTERN AVENUE AT 100' INTERVALS. PROVIDE SPOT ELEVATIONS AT CROWN OF PAVEMENT, EDGE OF PAVEMENT, GUTTER, TOP BACK OF CURB AND BACK OF WALK. LOCATE ALL UTILITIES IN THE RIGHT OF WAY. INCLUDE TOPO 100' PAST RETURNS AT INTERSECTIONS. MEASURE INVERTS, RIMS AND TOP OF NUT ON WATER VALVES.

DELIVERABLES

TOPO MAP – NO CONTOURS
CADD DRAWING WITH POINTS
ASCII FILE

LUMP SUM FEE.....$6,400.00

IF DURING THE COURSE OF THE WORK IT BECOMES APPARENT ADDITIONAL SERVICES ARE REQUIRED AND THIS AMOUNT WILL BE EXCEEDED, NOTIFICATION WILL BE MADE AND WORK WILL PROCEED ONLY ON MUTUAL AGREEMENT AS TO SCOPE AND COMPENSATION.

7878 North 16th St. • Suite 235 • Phoenix, AZ 85020
Phone (602) 870-1657 • Fax (602) 870-1660 • Website: www.horizonsurveys.com

ADDITIONAL SERVICES OF THE SURVEYOR, PRINCIPALS AND EMPLOYEES ENGAGED DIRECTLY ON THIS PROJECT SHALL BE BILLED ACCORDING TO THE HORIZON CONSULTANTS OF ARIZONA RATE SHEET ON A TIME AND MATERIALS BASIS. ANY CHANGE TO THE CONTRACT RENDERS IT NULL AND VOID. PLEASE ACKNOWLEDGE ACCEPTANCE WITH YOUR SIGNATURE BELOW AND RETURN A COPY TO HORIZON CONSULTANTS OF ARIZONA.

SURVEYOR
FORSMAN, INC. DBA
HORIZON CONSULTANTS OF ARIZONA
7878 NORTH 16TH STREET
SUITE 235
PHOENIX, AZ 85020

SIGNATURE: Ralph E. Pogue Jr.

PRINT: RALPH POGUE JR., R.L.S.

TITLE: SURVEY MANAGER

DATE: NOVEMBER 1, 2006

CLIENT
KIMLEY-HORN & ASSOCIATES
ATTENTION: RAJ CHRISTIAN
7878 NORTH 16TH STREET
SUITE 300
PHOENIX, AZ 85020

SIGNATURE: _____

PRINT: _____

TITLE: _____

DATE: _____

SPEEDIE AND ASSOCIATES
Geotechnical ▪ Environmental ▪ Materials Engineers

Gregg A. Creaser, P.E.
Brett P. Creaser, P.E.
Donald L. Cornelison, P.E.
Steven A. Griess, P.E.
Keith R. Gravel, P.E.
Jason C. Wells, P.E.
Brian E. Lingnau, Ph.D., P.E.
Timothy J. Rheinschmidt, R.G.
Richard A. Schooler, R.G.
Todd B. Hanke, P.E.

October 5, 2006

Chris Colson
Kimley-Horn and Associates, Inc.
7878 N. 16th Street
Suite 300
Phoenix, AZ 85020

RE: Proposal for Geotechnical Investigation
4th St. Roadway Improvements- Avondale
4th Street; Lower Buckeye to Western Ave
Avondale, AZ
Proposal No. 28392 S

Dear Mr. Colson:

We are pleased to provide our cost estimate to conduct a soil investigation and pavement design for the above referenced sites that will satisfy pavement rehabilitation requirements. All work on this project will be carried out under the overall supervision of a registered Professional Engineer in the State of Arizona.

We understand that construction will consist of about 1 mile of roadway improvements along the existing roadway. It is our understanding that due to age and use, the existing road has reached the end of its service life and needs rehabilitation work. No utilities are anticipated to be installed at this time.

GEOTECHNICAL INVESTIGATION

We will drill and sample sufficient test borings to adequately determine asphalt and subsoil conditions and provide samples for laboratory testing. Traffic control, City of Avondale permit and asphalt coring are anticipated. Sufficient laboratory tests will be conducted to properly classify the soils encountered and provide data for engineering design. We will mark the borings in the field and arrange for Blue Stake Clearance. We presently anticipate coring and drilling the following borings:

Location	Improvements	Number	Depth, ft
4th Street	Roadway Rehab	5	5

All subgrade borings will be drilled with a jeep mounted auger rig to the depths indicated above below existing ground surface, or refusal, whichever comes first. Access to the site by conventional jeep-mounted drilling equipment is assumed to be free and unencumbered.

We will prepare a report presenting all data obtained, together with our conclusions and recommendations. The report will address the site condition(s) and make recommendations for repair including removal and replacement (complete or partial), crack repair, overlay and/or slurry/fog seal. We will also provide specifications for the repair options/materials (not including striping). A final report will be issued after comment resolution.

This pavement evaluation and associated recommendations will be based on the requirements of ADOT and/or AASHTO or the local municipality. It is assumed that the owner and/or client will provide the anticipated traffic data required to complete the pavement design.

Charges for our services have been determined on the basis of our standard Fee and Rate Schedule, a copy of each which is attached and made a part hereof. We propose to provide the services set forth herein for a lump sum fee of **$4,900.00**, which includes all testing, engineering and reimbursable expenses and 4 copies of the report.

We appreciate the opportunity to submit this proposal for your consideration. If the terms set forth are satisfactory, please sign the attached copy and return it for our records.

Respectfully submitted,
SPEEDIE & ASSOCIATES

Tim J. Rheinschmidt, R.G.

APPROVED AND ACCEPTED
For: Kimley-Horn and Associates, Inc.

By: _____

Print Name: _____

Date: _____

EXHIBIT B
TO
PROFESSIONAL SERVICES AGREEMENT
BETWEEN
THE CITY OF AVONDALE
AND
KIMLEY-HORN AND ASSOCIATES, INC.

[Fee Estimate]

See following pages.

City of Avondale
4th Street Rehabilitation

November 28, 2006

DERIVATION OF COST PROPOSAL

(Figures Rounded To The Nearest $1)

ESTIMATED DIRECT LABOR

CLASSIFICATION	PERSON HOURS	BILLING RATE/HOUR	TOTAL	
Project Principal	-	$ 200.00	$ -	
Project Manager	46	$ 164.22	$ 7,554	
Project Engineer	162	$ 142.50	$ 23,084	
Engineer/Designer	188	$ 121.38	$ 22,819	
Tech/Draftsman	251	$ 83.78	$ 21,028	
Administrative	20	$ 89.63	$ 1,793	
Clerical	48	$ 58.50	$ 2,808	
	715	Hours		
Estimated Labor Cost			$ 79,086	EC10

ESTIMATED DIRECT EXPENSES

Travel	$ -		
Computer CAD Time & Plotting	$ 3,240		
Miscellaneous Expenses	$ 284		
	Total Estimated Expenses	$ 3,524	EC30

ESTIMATED OUTSIDE SERVICES AND CONSULTANTS

Firm	Cost	Compensation Method
Horizon	$ 6,400	LSUM
Speedie	$ 4,900	LSUM
Utility Potholes	$ 8,000	
Allowance	$ 10,000	
	$ -	
	$ -	
	Total Estimated Outside Services	$ 29,300 EC40

TOTAL ESTIMATED COST TO CONSULTANT	$ 32,824
Allocation @ 3.8% of Total Labor	$ 3,005
TOTAL LUMP SUM FEE	$ 114,915
CONTRACT TIME	Calendar Days

Consultant Firm Signature

Date

City of Avondale
4th Street Rehabilitation

November 28, 2006

ESTIMATED STAFF HOUR SUMMARY

SCOPE SECTION / TASK	Proj Prin	Proj Mgr	Proj Eng	Eng/Des	Tech/Draft	Admin	Clerical	Total
Project Management	-	18	22	-	-	20	8	68
Survey and Mapping Coordination	-	-	8	4	-	-	-	12
Project Research and Coordination	-	6	26	20	16	-	4	72
Preliminary Engineering	-	8	52	88	70	-	20	238
Final Design (Preparation of PS&E)	-	8	48	76	165	-	16	313
Bidding Assistance	-	6	6	-	-	-	-	12
								-
Totals	-	46	162	188	251	20	48	715
Percentages	0.00%	6.00%	23.00%	26.00%	35.00%	3.00%	7.00%	100%

City of Avondale

4th Street Rehabilitation

November 28, 2006

ESTIMATED STAFF HOURS

TASK	Scale	No Shts	Proj Prin	Proj Mgr	Proj Eng	Eng/Des	Tech/Draft	Admin	Clerical	Total
			$ 200.00	$ 164.22	$ 142.50	$ 121.38	$ 83.78	$ 89.63	$ 58.50	
Project Management										
Project Work Plan				2	4				8	14
Project kick off Meeting				4	6					10
Project Meetings (2 meetings)				8	8					16
Misc Project Management				4	4			20		28
										-
Subtotal Project Management			-	18	22	-	-	20	8	**68**
Survey and Mapping Coordination										
Review Existing Survey / Mapping					4					4
Coordinate with Subconsultant					2					2
Review survey data / create base map / LDD project					2	4				6
Subtotal Survey and Mapping Coordination			-	-	8	4	-	-	-	**12**
Project Research and Coordination										
Record Plan Research / Data Collection										-
Collect Inventory and Project Data						4			2	6
Inventory Existing Project Details						2	4		2	8
Review Available Data, Reports etc.					2	2				4
Field Investigations										-
Site Visit				4	4					8
Misc Coordination					4	4				8
Utility Coordination										-
Utility Mapping						4	8			12
Utility Conflicts Map						4	4			8
Utility Coordination Meetings				2	8					10
Utility Potholing					8					8
Subtotal Project Research and Coordination			-	6	26	20	16	-	4	**72**
Preliminary Engineering										
Roadway Drainage Memo				2	20	40	16		12	90
Geotechnical Investigation										-
Coordinate with Subconsultant					2					2
Review Report					2					2
Develop alignments (roadway / storm drain)					4	8				12
Evaluate utilities					2	4				6
60% Plans & Cost Estimate										
Cover	n/a	1					2			2
Key Map / Typical Sections	100	1			2	4	8			14
Plan & Profile including Storm Drain	20	12		2	8	16	24			50
Estimate					8	16	12			36
Quality Control				4	4					8
Submittals							8		8	16
										-
Subtotal Preliminary Engineering			-	8	52	88	70	-	20	**238**

City of Avondale

4th Street Rehabilitation

November 28, 2006

ESTIMATED STAFF HOURS

TASK	Scale	No Shts	Proj Prin	Proj Mgr	Proj Eng	Eng/Des	Tech/Draft	Admin	Clerical	Total
			$ 200.00	$ 164.22	$ 142.50	$ 121.38	$ 83.78	$ 89.63	$ 58.50	
Final Design (Preparation of PS&E)										
90% & Final PS&E										
Cover	n/a	1					1			1
Key Map / Typical Sections	100	1			2	4	4			10
Plan & Profile including Storm Drain	20	12		4	12	24	96			136
Storm Drain Lateral Profiles	2	1			6	8	36			50
Estimate					8	20	12			40
Specifications					8	20			8	36
Quality Control				4	12					16
Submittals							16		8	24
Subtotal Final Design (Preparation of PS&E)			-	8	48	76	165	-	16	**313**
Bidding Assistance										
Pre-Bid Meeting				4	4					8
Misc.				2	2					4
										-
Subtotal Bidding Assistance			-	6	6	-	-	-	-	**12**
Totals		15	-	46	162	188	251	20	48	**715**

City of Avondale
4th Street Rehabilitation

November 28, 2006

ESTIMATE OF DIRECT EXPENSES

Travel

	A. Hotel	$ -	
		$ -	
		$ -	
	B. Subsistence (0 people x 0 day)	$ -	day
	(0 Breakfast, 0 Lunch, 0 Dinner)		
	C. Local Mileage (trips @ miles each)		
		-	miles
		$ -	
		-	miles
		$ -	
	Subtotal Travel	$ -	

Computer CAD Time & Plotting

	A. CADD:	300	hours
	300 hrs. at billing rate $10.00 per hour	$ 3,000	
Plotting	B. 8 Plots	90	plots
	Total expense at billing rate of $1.00 per plot	$ 90	
	C. Vellum Plots	15	plots
	Total expense at billing rate of $10.00 per plot	$ 150	
	Subtotal Computer CAD Time & Plotting	$ 3,240	

Miscellaneous Expenses

A. Video tape @ $6.00	$ -
B. Film @ $20.00	$ -
C. Overnite Delivery (0 @ $50)	$ -
D. In town delivery (5 @ $15)	$ 75
E. Outside Copying	$ 209
Subtotal Miscellaneous Expenses	$ 284

ESTIMATED OUTSIDE SERVICES & CONSULTANTS

Horizon	$ 6,400
Speedie	$ 4,900
Utility Potholes	$ 8,000
Allowance	$ 10,000
	$ -
TOTAL ESTIMATED OUTSIDE SERVICES	$ 29,300

TOTAL ESTIMATED EXPENSES **$ 32,824**

CITY COUNCIL REPORT

SUBJECT:
Resolution 2618-1206 - Adoption of Council Goals for FY 2007-2008

MEETING DATE:
December 18, 2006

TO: Mayor and Council

FROM: Pier Simeri

THROUGH: Charlie McClendon, City Manager

PURPOSE:

Staff is requesting that the City Council adopt a resolution establishing Council goals for fiscal year 2007-2008.

BACKGROUND:

The Avondale City Council held its annual Council Goal Setting Retreat at the Public Safety Building on November 13, 2006. The retreat was attended by the Mayor, City Council members, the City Manager, staff from the City Manager's Office and Department Directors.

The purpose of the retreat was to follow up on the goals set forth in the Council Visioning Retreat, held last August, as well as to discuss other Council goals for the upcoming 2007-2008 fiscal year. City Manager Charles McClendon presented a review of achievement of the Goals that were adopted for FY 06-07. Staff also presented a financial forecast/budget presentation, and provided feedback to Council regarding input from the Resident Appreciation Night held in September and the Citizen Satisfaction Survey, which was conducted in the Fall. The Council then discussed its priority goals for the upcoming year.

DISCUSSION:

The primary purpose in establishing these priority goals was to give staff direction in preparing the budget and departmental work plans for the next fiscal year. As such, it is anticipated that the final budget presented to Council for fiscal year 2007-2008 will allocate resources necessary to accomplish these goals. The Mayor and City Council developed the following goals for the 2007-2008 fiscal year:

Goal: Financial Stability
Ensure long-term financial stability of the City. Maintain the fund balance, contingency reserves, and service levels to ensure efficient operations.

• Work toward a May 2007 bond election and possible future elections on other revenue options
• Continue to improve efficiency and effectiveness of operations throughout all city departments
• Develop a legislative agenda focusing on ways to maximize financial benefits for high cost projects benefiting Avondale

Goal: Quality of Life
Provide quality of life options and opportunities in the community.
• Develop plans for a quality recreational facility to support programming for all ages, exploring opportunities for partnerships where possible
• Complete construction of the Old Town library branch
• Develop and where possible, accelerate the timeline for the design and construction of the Encanto-area community center
• Develop a vibrant and engaging public arts program through a variety of ways, such as exploring opportunities for dedicated funding sources for arts and culture, working with the Municipal Arts Committee, and supporting local cultural organizations

• Continue to support and expand Council-adopted initiatives such as Healthy Avondale, City of Character, Inclusive Communities and Strong Families
• Develop a long-range plan for the future of the Agua Fria Recreation Corridor
• Consider the feasibility of proposed improvements at City parks, such as additional park amenities (including a restaurant), and assessing changes to concessions operations and policy regarding alcohol in the parks
• Provide adequate staff and equipment to maintain high levels of service at city parks and library facilities
• Develop a multi-faceted approach to control, eradicate and prevent graffiti in the community
• Explore ways to improve uncontained trash collection in the community

Goal: Public Safety
Improve public safety in the community.

• Add staff and provide appropriate training as necessary in the police and fire departments to ensure adequate response times and to serve the public safety of our growing community
• Complete the implementation of the new police radio system
• Evaluate opportunities to use technology to aid and improve public safety response and enforcement
• Strengthen volunteer and community involvement programs – such as the CSO and CERT programs, neighborhood Block Watch and GAIN -- to enhance public safety in the community
• Expand neighborhood policing efforts, targeting areas of the community where there is a perceived sense of lack of safety so that all areas of the community view Avondale as a safe place to live and work

Goal: Community Development
Strive to make Avondale an attractive investment opportunity for retail, commercial, office and light industrial development and ensure that all development in the community meets quality standards.

• Develop the Avondale Boulevard Specific Area/City Center Plan (defined as area stretching from Interstate 10 to Coldwater Springs Boulevard) in order to implement the Council's vision for Avondale Boulevard as a premier destination for shopping, restaurants and entertainment, with exciting mixed-use development to include hotels, higher quality density housing, professional office space, with an atmosphere that is fun, pedestrian friendly and conducive to daytime and night time activities
• Issue a Request for Qualifications (RFQ) for a study of the stretch of Avondale Boulevard from Buckeye Road to Phoenix International Raceway and the remainder of Avondale south of Buckeye Road, to ensure that the future development of southern Avondale is consistent with the Council's vision for the area, and where appropriate, amend the General Plan, taking into consideration Avondale's relationship to the State Route 801 alignment, PIR and opportunities for business development along the Gila River
• Develop and initiate a revitalization plan in the Old Town Avondale area, to include Central, Western and Main Streets, making sure to partner with the City of Goodyear, local businesses and surrounding neighborhoods in investing in the area
• Take an active role in the process regarding the location of the State Route 801 corridor, and the widening of Interstate 10, to ensure that future decisions are in the best interest of the City
• Continue to market Avondale as a premier location for new investment in the retail, commercial office and light industrial sectors with a primary emphasis on quality, location and long-term value to the City of Avondale
• Continue to update development-related codes and ordinances to ensure efficient and effective city review process

Goal: Environmental Leadership
Meet, and wherever possible, exceed regulations pertaining to water conservation, air-quality and storm water management.

• Continue to assure high water quality standards and ensure that future water supply needs are met
• Continue planning for the expansion of the Wastewater Treatment Plant to meet future growth
• Implement the master plan for water reclamation
• Continue to be a leader in water conservation efforts
• Implement the NPDES plan per federal requirements
• Continue public education efforts regarding water conservation, air quality and storm water management

Goal: Staff Retention
Encourage recruitment and retention of quality and diverse staff and improve administrative capacity.

• Continue to improve customer service standards across the organization and provide a comprehensive customer training program
• Continue to provide employees opportunities for higher education and training
• Continue training in the areas of race equality and diversity
• Conduct a comprehensive job classification and compensation study
Goal: Traffic Management
Improve transportation and traffic flow in the community on major streets and in neighborhoods.
• Provide opportunities for alternative modes of transportation, including walking and biking
• Develop and implement the Neighborhood Traffic Mitigation program
• Conduct warrant analyses for traffic signals as needed throughout the community; install traffic signals that are planned in the CIP, including Thomas Road & Avondale Boulevard, and work with the County on the traffic signal at Westwind Parkway & Indian School Road
• Improve traffic flow on streets throughout the community
• Continue enforcement and education efforts to curb speeding in the community

Goal: Community Involvement
Encourage effective coordination and involvement with community groups and other levels of government; promote community involvement among residents.

• Complete curriculum, recruit citizens and launch the Avondale Leadership Academy in Spring 2007
• Encourage continued involvement of Board/Committee members in the government process
• Continue to make improvements to Channel 11 and the Avondale website
• Solicit input and openly communicate with citizens and continue to work closely with Homeowner Associations and Neighborhood groups; increase opportunities for involvement and civic participation

RECOMENDATION:

Staff recommends that the Mayor and Council adopt a resolution establishing Council Goals for FY 2007-2008.

ATTACHMENTS:

Click to download

- Resolution 2618-1206

RESOLUTION NO. 2618-1206

A RESOLUTION OF THE COUNCIL OF THE CITY OF AVONDALE, ARIZONA, ESTABLISHING PRIORITY GOALS FOR FISCAL YEAR 2007-2008.

WHEREAS, on November 13, 2006, the Council of the City of Avondale (the "City Council") held a goal setting retreat (the "Retreat") with the City of Avondale staff; and

WHEREAS, the City Council established priority goals for fiscal year 2007-2008 at the Retreat; and

WHEREAS, the purpose of establishing priority goals is to gives staff direction in preparing the budget for fiscal year 2007-2008.

NOW, THEREFORE, BE IT RESOLVED BY THE COUNCIL OF THE CITY OF AVONDALE as follows:

SECTION 1. That the City Council's priority goals are hereby adopted for fiscal year 2007-2008 in the form attached hereto as Exhibit A and incorporated herein by reference.

SECTION 2. That the Mayor, the City Manager, the City Clerk and the City Attorney are hereby authorized and directed to execute all documents and take all steps necessary to carry out the purpose and intent of this Resolution.

PASSED AND ADOPTED by the Council of the City of Avondale, December 18, 2006.

_____
Marie Lopez-Rogers, Mayor

ATTEST:

_____
Linda M. Farris, City Clerk

APPROVED AS TO FORM:

_____
Andrew J. McGuire, City Attorney

EXHIBIT A
TO
RESOLUTION NO. 2618-1206

[Council Goals]

See following pages.

City Council Goals for Fiscal Year 2007-2008

Goal: Financial Stability
Ensure long-term financial stability of the City. Maintain the fund balance, contingency reserves, and service levels to ensure efficient operations.

- Work toward a May 2007 bond election and possible future elections on other revenue options
- Continue to improve efficiency and effectiveness of operations throughout all city departments
- Develop a legislative agenda focusing on ways to maximize financial benefits for high cost projects benefiting Avondale

Goal: Quality of Life
Provide quality of life options and opportunities in the community.

- Develop plans for a quality recreational facility to support programming for all ages, exploring opportunities for partnerships where possible
- Complete construction of the Old Town library branch
- Develop and where possible, accelerate the timeline for the design and construction of the Encanto-area community center
- Develop a vibrant and engaging public arts program through a variety of ways, such as exploring opportunities for dedicated funding sources for arts and culture, working with the Municipal Arts Committee, and supporting local cultural organizations
- Continue to support and expand Council-adopted initiatives such as Healthy Avondale, City of Character, Inclusive Communities and Strong Families
- Develop a long-range plan for the future of the Agua Fria Recreation Corridor
- Consider the feasibility of proposed improvements at City parks, such as additional park amenities (including a restaurant), and assessing changes to concessions operations and policy regarding alcohol in the parks
- Provide adequate staff and equipment to maintain high levels of service at city parks and library facilities
- Develop a multi-faceted approach to control, eradicate and prevent graffiti in the community
- Explore ways to improve uncontained trash collection in the community

Goal: Public Safety
Improve public safety in the community.

- Add staff and provide appropriate training as necessary in the police and fire departments to ensure adequate response times and to serve the public safety of our growing community
- Complete the implementation of the new police radio system
- Evaluate opportunities to use technology to aid and improve public safety response and enforcement
- Strengthen volunteer and community involvement programs – such as the CSO and CERT programs, neighborhood Block Watch and GAIN -- to enhance public safety in the community
- Expand neighborhood policing efforts, targeting areas of the community where there is a perceived sense of lack of safety so that all areas of the community view Avondale as a safe place to live and work

Goal: Community Development
Strive to make Avondale an attractive investment opportunity for retail, commercial, office and light industrial development and ensure that all development in the community meets quality standards.

- Develop the Avondale Boulevard Specific Area/City Center Plan (defined as area stretching from Interstate 10 to Coldwater Springs Boulevard) in order to implement the Council's vision for Avondale Boulevard as a premier destination for shopping, restaurants and entertainment, with exciting mixed-use development to include hotels, higher quality density housing, professional office space, with an atmosphere that is fun, pedestrian friendly and conducive to daytime and night time activities
- Issue a Request for Qualifications (RFQ) for a study of the stretch of Avondale Boulevard from Buckeye Road to Phoenix International Raceway and the remainder of Avondale south of Buckeye Road, to ensure that the future development of southern Avondale is consistent with the Council's vision for the area, and where appropriate, amend the General Plan, taking into consideration Avondale's relationship to the State Route 801 alignment, PIR and opportunities for business development along the Gila River
- Develop and initiate a revitalization plan in the Old Town Avondale area, to include Central, Western and Main Streets, making sure to partner with the City of Goodyear, local businesses and surrounding neighborhoods in investing in the area

- Take an active role in the process regarding the location of the State Route 801 corridor, and the widening of Interstate 10, to ensure that future decisions are in the best interest of the City
- Continue to market Avondale as a premier location for new investment in the retail, commercial office and light industrial sectors with a primary emphasis on quality, location and long-term value to the City of Avondale
- Continue to update development-related codes and ordinances to ensure efficient and effective city review process

Goal: Environmental Leadership
Meet, and wherever possible, exceed regulations pertaining to water conservation, air-quality and storm water management.

- Continue to assure high water quality standards and ensure that future water supply needs are met
- Continue planning for the expansion of the Wastewater Treatment Plant to meet future growth
- Implement the master plan for water reclamation
- Continue to be a leader in water conservation efforts
- Implement the NPDES plan per federal requirements
- Continue public education efforts regarding water conservation, air quality and storm water management

Goal: Staff Retention
Encourage recruitment and retention of quality and diverse staff and improve administrative capacity.

- Continue to improve customer service standards across the organization and provide a comprehensive customer training program
- Continue to provide employees opportunities for higher education and training
- Continue training in the areas of race equality and diversity
- Conduct a comprehensive job classification and compensation study

Goal: Traffic Management
Improve transportation and traffic flow in the community on major streets and in neighborhoods.

- Provide opportunities for alternative modes of transportation, including walking and biking
- Develop and implement the Neighborhood Traffic Mitigation program

- Conduct warrant analyses for traffic signals as needed throughout the community; install traffic signals that are planned in the CIP, including Thomas Road & Avondale Boulevard, and work with the County on the traffic signal at Westwind Parkway & Indian School Road
- Improve traffic flow on streets throughout the community
- Continue enforcement and education efforts to curb speeding in the community

Goal: Community Involvement

Encourage effective coordination and involvement with community groups and other levels of government; promote community involvement among residents.

- Complete curriculum, recruit citizens and launch the Avondale Leadership Academy in Spring 2007
- Encourage continued involvement of Board/Committee members in the government process
- Continue to make improvements to Channel 11 and the Avondale website
- Solicit input and openly communicate with citizens and continue to work closely with Homeowner Associations and Neighborhood groups; increase opportunities for involvement and civic participation

CITY COUNCIL REPORT

SUBJECT:
Ordinance 1237-1206 Amending Chapter 23 of the City Code, Relating to Speed Limits, Truck Routes and School Zones

MEETING DATE:
December 18, 2006

TO: Mayor and Council

FROM: Carnell Thurman, City Engineer, P.E., (623) 478-3271

THROUGH: Charlie McClendon, City Manager

PURPOSE:

Staff is requesting the City Council adopt an ordinance amending Chapter 23, "Traffic" regarding one-way streets, truck routes, speed limits, and school zones.

BACKGROUND:

The City of Avondale Municipal Code Chapter 23 (Traffic) is in need of updating to reflect current circulation patterns on the city's roadway network. In the past year, several new streets have been constructed that need designated speed limits. In addition, several sections have been revised to be consistent with current practices and correct missing roadway segments. The following sections are proposed for revision:

- 23-6. Authority to place and obedience to restricted turn signs.
- 23-8. One-way streets and alleys.
- 23-9. One-way streets.
- 23-14. Truck routes.
- 23-15. Speed limits on residential and commercial streets.
- 23-16. Speed limits and signage for school zones and school crossings.

DISCUSSION:

Items proposed for revision in the City Code of Ordinances Chapter 23 are summarized as follows:

23-6. Authority to place and obedience to restricted turn signs.

Updated to include language giving the city engineer or designee the authority to determine turning restrictions.

23-8. One-way streets and alleys.

Updated to include language giving the city engineer or designee the authority to determine one-way restrictions.

23-9. One-way streets.

Updated to include language giving the city engineer or designee the authority to determine one-way restrictions and adding Brooke Place from Central Avenue to 4th Street as a one-way street.

23-14. Truck routes.

This section is updated to eliminate Dysart Road, Van Buren Street, Western Avenue and MC 85/Buckeye Road as truck routes, and adding Litchfield Road and 107th Avenue as recommended in the Avondale Transportation Plan as new truck routes. MC 85/Buckeye Road, Lower Buckeye Road, and Indian School Road are also recommended in the Transportation Plan as roads to be designated as truck routes through the city. However, because a majority of these two roadways are under Maricopa County jurisdiction, the city does not have the authority to designate them as through truck routes. Staff is continuing to coordinate with the County on truck route issues on county roadways that run through the City.

23-15. Speed limits on residential and commercial streets.

This Section provides updates to posted speed limits citywide. Several collector roadways have been improved or newly constructed that require speed limits to be designated, such as Civic Center Drive, Roosevelt Parkway S., and Eliseo C. Felix Jr. Way. In addition, the updates clarify some collector roadways that were missing or had incorrect speed limits designated, such as Rancho Santa Fe Blvd., Santa Fe Trail, Osborn Road, 132nd Avenue, Whyman Avenue, Riley Drive and Central Avenue. It also correct a few minor typographical errors, such as 118th "Drive" to 118th "Avenue" and "Elisio" to "Eliseo".

Updates to the list of arterial streets include revisions to eliminate those sections under Maricopa County jurisdiction, such as Indian School Road, and sections of MC 85/Buckeye Road/Main Street, Lower Buckeye Road, Avondale Blvd., and El Mirage Road. In addition, a proposed change includes lowering the speed limit on Dysart Road to 20 MPH from MC 85/Buckeye Road to Western Avenue over the UPR/R tracks due to safety concerns with the vertical alignment. Typographical errors in the list are also revised.

Lastly, the revisions to this section clarify that speed limits are designated on City streets according to and consistent with prescribed authority in the applicable sections of the Arizona Revised Statutes.

23-16. Speed limits and signage for school zones and school crossings.

This Section is being revised to clarify the distinctions between a school crossing and a flashing school zone. The revisions allow school crossings to be consistent with current Arizona Revised Statute Sec. 28-797 and Arizona Department of Transportation (ADOT) Manual "Traffic Safety in School Areas" requirements governing school crosswalks. The ADOT Manual stipulates the warrants, criteria, and operating requirements for speed limits and signs for 15 MPH school crossings.

The revisions also clarify the criteria for flashing school zones including where and when flashing signs can be located on city streets to reduce speed limits near school areas when school is in session and the sign is flashing. It also clarifies that flashing school zone signs can be installed on the approaches to school property to be consistent with current practices.

BUDGETARY IMPACT:

There is no immediate financial impact.

RECOMENDATION:

Staff recommends that the City Council adopt an ordinance amending Chapter 23, "Traffic" regarding one-way streets, truck routes, speed limits, and school zones.

ATTACHMENTS:

Click to download

- 1237-1206 Speed Limit Ordinance

ORDINANCE NO. 1237-1206

AN ORDINANCE OF THE COUNCIL OF THE CITY OF AVONDALE, ARIZONA, AMENDING THE AVONDALE CITY CODE, CHAPTER 23, TRAFFIC, RELATING TO SPEED LIMITS.

BE IT ORDAINED BY THE COUNCIL OF THE CITY OF AVONDALE as follows:

SECTION 1. That the Avondale City Code, Chapter 23, Traffic, Article I, In General, Section 23-6, Authority to place and obedience to restrict turn signs, is hereby amended as follows:

23-6 Authority to place and obedience to restricted turn signs.

(a) The ~~police chief~~ CITY ENGINEER, OR DESIGNEE, on approval by the city manager, is hereby authorized to determine those intersections at which drivers of vehicles shall not make a right, left or u-turn, and shall place proper signs at such intersections. The making of such turns may be prohibited between certain hours of any day and permitted at other hours, in which event the same shall be plainly indicated on the signs or such signs may be removed when such turns are permitted.

(b) Whenever authorized signs are erected indicating that no right or left or u-turn is permitted, no driver of a vehicle shall disobey the directions of any such sign.

SECTION 2. That the Avondale City Code, Chapter 23, Traffic, Article I, In General, Section 23-8, One-way streets and alleys, is hereby amended as follows:

23-8 One-way streets and alleys.

(a) The council shall by resolution designate any streets or alleys which are to be limited to one-way traffic.

(b) When any resolution of the council designates any one-way street or alley, the ~~police chief~~ CITY ENGINEER, OR DESIGNEE, shall place and maintain signs giving notice thereof, and no such regulation shall be effective unless such signs are in place. Signs indicating the direction of lawful traffic movement shall be placed at every intersection where movement of traffic in the opposite direction is prohibited.

SECTION 3. That the Avondale City Code, Chapter 23, Traffic, Article I, In General, Section 23-9, One-way streets, is hereby amended as follows:

23-9 One-way streets.

~~The maintenance road located immediately to the south and west of the Coldwater Business Park, as shown in Exhibit A to Ordinance No. 308 is hereby designated a one-way street with traffic moving in a westerly and northerly direction.~~ The ~~police chief~~ CITY ENGINEER, OR DESIGNEE, shall place one-way street signs indicating the direction of lawful traffic movement on the street and at intersections where movement of traffic in the opposite direction is prohibited. THE FOLLOWING STREETS ARE HEREBY DESIGNATED AS ONE-WAY STREETS WITH TRAFFIC MOVEMENT PERMITTED ONLY IN THE DIRECTION AS INDICATED:

(A) THE MAINTENANCE ROAD LOCATED IMMEDIATELY TO THE SOUTH AND WEST OF THE COLDWATER BUSINESS PARK, AS SHOWN IN EXHIBIT A TO ORDINANCE NO. 308, WITH TRAFFIC MOVING IN THE WESTBOUND AND NORTHBOUND DIRECTIONS.

(B) BROOKE PLACE FROM CENTRAL AVENUE TO 4TH STREET, WITH TRAFFIC MOVING IN THE EASTBOUND DIRECTION.

SECTION 4. That the Avondale City Code, Chapter 23, Traffic, Article I, In General, Section 23-14, Truck routes, is hereby amended as follows:

23-14 Truck routes.

(a) The following streets are hereby designated as through truck routes for the City of Avondale:

~~(1) Dysart Road from State Route 85, north to McDowell Road.~~

~~(2) Western Avenue from Dysart Road, west to Third Avenue.~~

~~(3) State Route 85 through the Avondale jurisdiction.~~

~~(4) Van Buren Street through the Avondale jurisdiction.~~

(1) LITCHFIELD ROAD FROM MC 85/BUCKEYE ROAD TO BROADWAY ROAD.

(2) 107TH AVENUE FROM THE SOUTH END TO MCDOWELL ROAD.

(b) It shall be unlawful and punishable as provided in sections 1-9 of this Code for any person to operate a vehicle with a manufacturer's rated chassis capacity in excess of one (1) ton or a tractor or semitrailer on any street other than those designated in subsection (a) hereof as truck routes except for the purpose of local delivery.

SECTION 5. That the Avondale City Code, Chapter 23, Traffic, Article I, In General, Section 23-15, Speed limits on residential and commercial streets, subsection (a) is hereby amended as follows:

(a) Unless otherwise designated below ACCORDING TO AUTHORITY PRESCRIBED IN ARIZ. REV. STAT. § 28-703, the maximum speed limit on all residential and commercial streets within the City of Avondale shall be the prima facie reasonable speed as prescribed in ARIZ. REV. STAT. § 28-701, and the maximum speed limit approaching school crossings shall be as prescribed in ARIZ. REV. STAT. § 28-701.B.1. SCHOOL CROSSINGS SHALL BE ESTABLISHED IN ACCORDANCE WITH ARIZ. REV. STAT. § 28-797 AND THE MOST RECENT EDITION OF THE ARIZONA DEPARTMENT OF TRANSPORTATION "TRAFFIC SAFETY FOR SCHOOL AREAS GUIDELINES" MANUAL.

SECTION 6. That the Avondale City Code, Chapter 23, Traffic, Article I, In General, Section 23-15, Speed limits on residential and commercial streets, subsections (b), (c), (d) and (e) are hereby deleted in their entirely and replaced with the following:

(b) The maximum speed limit on the following collector streets shall be:

TABLE INSET:

Street Name	From	To	Maximum Speed Limit (MPH)
Rancho Santa Fe Blvd.	Thomas Road	Dysart Road	25
Santa Fe Trail	Indian School Road	Rancho Santa Fe Blvd.	25
Westwind Parkway	107th Avenue	Thomas Road	30
Crystal Gardens Parkway	107th Avenue	Thomas Road	30
Encanto Boulevard	Crystal Gardens Parkway	119th Avenue	25
116th Lane	Palm Lane	Encanto Blvd.	25
Harbor Shores Blvd.	McDowell Road	107th Avenue	30
Fairway Drive	Van Buren Street	Coldwater Springs Blvd.	30
Coldwater Springs Blvd.	126th Avenue	Avondale Blvd.	30
Coldwater Springs Blvd.	Avondale Blvd.	East End	25
Civic Center Drive	Avondale Blvd.	Coldwater Springs Blvd.	25
Links Drive	Van Buren Street	Coldwater Springs Blvd.	30
118th Avenue	Coldwater Springs Blvd.	Western Avenue	25

Maricopa Street	118th Lane	Avondale Blvd.	25
Maricopa Street	Avondale Blvd.	East End	30
Pima Street	Avondale Blvd.	114th Avenue	25
4th Street/Pima Street (Cashion)	113th Avenue	107th Avenue	25
Durango Street	El Mirage Road	119th Drive	30
Durango Street	Avondale Blvd.	107th Avenue	25
Cocopah Circle	Durango Street (West End)	Durango Street (East End)	30
Eliseo C. Felix Jr. Way	Van Buren Street	Riley Drive	30
Eliseo C. Felix Jr. Way	North End	Van Buren Street	25
Riley Drive	4th Street	East End	25
Roosevelt Street	99th Avenue	107th Avenue	35
Roosevelt Parkway South	110th Drive	107th Avenue	30
Roosevelt Parkway	Avondale Blvd.	East End	35
Whyman Avenue	117th Avenue	Avondale Blvd.	25
Whyman Avenue	Avondale Blvd.	Durango Street	30
109th Avenue	Lower Buckeye Road	Whyman Avenue	30
112th Lane	Whyman Avenue	Lower Buckeye Road	30
114th Avenue	Pima Street	Durango Street	25
109th Avenue/James Arthur Drive	Durango Street	Buckeye Road	25
111th Avenue	Durango Street	Buckeye Road	25
113th Avenue/Jessie May Avenue	Durango Street	Buckeye Road	25
111th Avenue	Campbell Avenue	Garden Lakes Parkway	25
111th Avenue	Thomas Road	Lakeshore Drive	25
127th Avenue	Florence Street	Illini Street	25
4th Street (Old Town Avondale)	Madden Drive	Van Buren Street	25
Central Avenue	Lower Buckeye Road	MC 85/Buckeye Road	25
Central Avenue	MC 85/Buckeye Road	Van Buren Street	35
Central Avenue	Van Buren Street	North End	25
Osborn Road	Indian School Road	Santa Fe Trail	25

132nd Avenue	Osborn Road	Indian School Road	25
137th Avenue	Thomas Road	Indian School Road	30

(c) All other collector streets not listed above shall have a posted speed limit of 25 MPH.

(d) The maximum speed limit on the following arterial streets shall be:

TABLE INSET:

Street Name	From	To	Maximum Speed Limit (MPH)
107th Avenue	Southern Avenue	Durango Street	45
107th Avenue	Durango Street	MC 85/Buckeye Road	40
107th Avenue	MC 85/Buckeye Road	McDowell Road	45
107th Avenue	McDowell Road	Indian School Road	35
Avondale Boulevard	Lower Buckeye Road	Durango Street	40
Avondale Boulevard	Durango Street	MC 85/Buckeye Road	35
Avondale Boulevard	MC 85/Buckeye Road	Interstate 10	45
Avondale Boulevard	McDowell Road	Encanto Boulevard	40
Avondale Boulevard	Encanto Boulevard	Thomas Road	35
El Mirage Road	Elwood Street	MC 85/Buckeye Road	45
El Mirage Road	Van Buren Street	North End	25
Vermeersch/127th Avenue	Broadway Road	Lower Buckeye Road	40
Dysart Road	Harrison Drive	MC 85/Buckeye Road	35
Dysart Road	MC 85/Buckeye Road	Western Avenue	20
Dysart Road	Western Avenue	Riley Drive	30
Dysart Road	Riley Drive	Van Buren Street	35
Dysart Road	Van Buren Street	McDowell Road	40
Dysart Road	McDowell Road	Indian School Road	45
Thomas Road	99th Avenue	Avondale Boulevard	45
Thomas Road	Avondale Boulevard	119th Avenue	35
Thomas Road	Santa Fe Trail	137th Avenue	35
McDowell Road	99th Avenue	Avondale Boulevard	45
McDowell Road	Avondale Boulevard	Dysart Road	40
Van Buren Street	99th Avenue	Avondale Boulevard	45
Van Buren Street	Avondale Boulevard	West End of Agua Fria River Bridge	45

Van Buren Street	West End of Agua Fria River Bridge	La Jolla Boulevard	40
Western Avenue	Dysart Road	4th Avenue	25
MC 85/Main Street	Central Avenue	Dysart Road	40
MC 85/Main Street	Dysart Road	West Side of Agua Fria River	45
MC 85/Buckeye Road	1180 feet east of Avondale Boulevard	107th Avenue	45
Lower Buckeye Road	El Mirage Road	1300 Feet to the East	45
Indian Springs Road	133rd Avenue	El Mirage Road	45

SECTION 7. That the Avondale City Code, Chapter 23, Traffic, Article I, In General, Section 23-15, Speed limits on residential and commercial streets, subsection (f) is hereby renumbered as a new subsection (e).

SECTION 8. That the Avondale City Code, Chapter 23, Traffic, Article I, In General, Section 23-16, Speed limits and signage on school and school crossing zones, is hereby deleted in its entirety and replaced with the following:

23-16 Speed limits and signage for school zones and school crossings.

(a) Definitions:

"School Zone:" Streets regularly used by students while following a designated walking route to and from school or directly adjacent to school property having reduced speed limits marked with flashing yellow lights in accordance with the current version of the MUTCD as published by the Federal Highway Administration of the United States Department of Transportation and the criteria set forth in this Section.

"School Crossing:" The school crosswalk marked in yellow, accompanied by NO PASSING 15 MPH SCHOOL IN SESSION and STOP WHEN CHILDREN IN CROSSWALK portable signs, and installed according to ARIZ. REV. STAT. § 28-797 and the most recent edition of the Arizona Department of Transportation "Traffic Safety for School Areas Guidelines" manual.

"Other traffic control:" Traffic control at a crosswalk other than portable 15-mph speed limit signs and portable "Stop When Children in Crosswalk" signs. Other traffic control devices may include but are not limited to traffic signals and stop signs.

(b) Procedure:

(1) Requests for School Crossings for any school in the City shall come from the school district's transportation department, school district superintendent or school principal. All requests shall be submitted in writing to the city's engineering department. Requests shall be evaluated in accordance with the criteria specified in the most recent edition of the Arizona

Department of Transportation Manual on "Traffic Safety for School Areas", ADOT Traffic Engineering Policies, Guides and Procedures and ARIZ. REV. STAT. § 28-797.

(2) Requests for School Zones near any school in the City shall come from the school district's transportation department, school district superintendent or school principal. All requests shall be submitted in writing to the city's engineering department. Requests shall be evaluated for compliance with the criteria specified within this Section. Evaluation may require measurements of existing travel speed, measurement of sight distance at the crosswalk, street geometry, accident history and average daily traffic at this location. Locations that meet the criteria specified in this Section will be considered eligible for designation as school zones. Potential locations for these devices may also be identified through a school safety audit coordinated by the city's engineering department.

(3) The city manager or authorized designee shall have the discretion to waive or vary the criteria specified in this Section. The city manager or designee may also elect to recommend public hearings. Should a citizen wish to appeal the decision of the city manager or designee regarding whether a school zone will be established, the citizen shall send a letter to the city manager or designee requesting a hearing at a public meeting of the city council. The city council shall hear the issue at their next available regularly scheduled council meeting.

(c) Criteria to establish a flashing school zone:

(1) On roads with a warranted and installed School Crossing for elementary and middle schools.

(i) The street must be classified by the City as a major collector or higher.

(ii) The regulatory speed limit must be 35 miles per hour or greater.

(iii) The street must consist of two or more through motor vehicle travel lanes per direction with a painted, textured or raised median or two-way left turn lane.

(iv) More than an average of 10,000 vehicles must travel the street per day.

(v) A school crosswalk must be warranted in accordance with the guidelines included in the ADOT publication "Traffic Safety for School Areas."

(vi) The school crosswalk must be established and signed in accordance with the requirements provided in the ADOT publication, "Traffic Safety for School Areas."

(vii) The signs for this zone shall consist of the following regulatory signs in conformance with the most recent version of the MUTCD at the indicated locations:

TABLE INSET:

SIGN	LOCATION
School zone speed limit 25 mph ahead when flashing	Minimum of 800 feet prior to initial 15 mph crosswalk sign
School zone speed limit 25 mph when flashing	Minimum of 400 feet prior to initial 15 mph crosswalk sign
End school zone speed limit	Minimum of 100 feet subsequent to 15 mph crosswalk

(2) On roads near elementary and middle schools with no warranted or installed School Crossings and near high schools.

(i) The street must be classified by the City as a major collector or higher.

(ii) The regulatory speed limit must be greater than 35 mph.

(iii) The street must consist of two or more through motor vehicle travel lanes per direction with a painted, textured or raised median or two-way left turn lane.

(iv) More than an average of 10,000 vehicles must travel the street per day.

(v) The school, whether public, private or charter, must have an annual enrollment of more than 1,000 students and be immediately adjacent to the street right-of-way.

(vi) The signs for this zone shall consist of the following regulatory signs in conformance with the most recent version of the MUTCD at the indicated locations, and the indicated speed limit shall be 10 mph less than the posted regulatory speed limit unless extenuating circumstances prevail:

TABLE INSET:

SIGN	LOCATION
School zone speed limit XX mph when flashing	At the beginning or no more than 300 feet prior to the edge of school property
End school zone speed limit	No more than 100 feet subsequent to edge of school property

(d) Flashing yellow lights shall not be installed where they would be in conflict with, detract from, or otherwise diminish the effectiveness of other nearby traffic control devices, or where it is found during the course of an engineering study that the existing 15-mph school crossing no longer meets the warrants for a 15-mph school crossing as established by the ADOT Manual on 'Traffic Safety for School Areas' and another safe and usable route to the school exists.

(e) When flashing school zones for adjacent schools are coincident, only one set of flashing light regulatory signs shall be provided. The initial signs shall be provided prior to the first crosswalk or school property and the final sign subsequent to the last crosswalk or school property.

(f) The City shall be responsible for the installation and maintenance of flashing school zone traffic control devices as may be deemed appropriate and necessary and for providing notice of speed limits established by this Section. The City shall determine appropriate operating times for flashing yellow lights based on school start and dismissal times and extracurricular activities. Flashing yellow lights installed in conjunction with a 15-mph school crossing will operate when the 15-mph school crossing in effect.

SECTION 10. That the Mayor, the City Manager, the City Clerk and the City Attorney are hereby authorized and directed to execute all documents and take all steps necessary to carry out the purpose and intent of this Ordinance.

SECTION 11. If any provision of this Ordinance is for any reason held by any court of competent jurisdiction to be unenforceable, such provision or portion thereof shall be deemed separate, distinct, and independent of all other provisions and such holding shall not affect the validity of the remaining portions of this Ordinance.

PASSED AND ADOPTED by the Council of the City of Avondale, December 18, 2006.

_____
Marie Lopez-Rogers, Mayor

ATTEST:

_____
Linda M. Farris, City Clerk

APPROVED AS TO FORM:

_____
Andrew J. McGuire, City Attorney

698446.1

CITY COUNCIL REPORT

SUBJECT:
Ordinance 1225-1206 - Correction to 1997 ROW Annexation Ordinance

MEETING DATE:
December 18, 2006

TO: Mayor and Council

FROM: Carmen Martinez

THROUGH: Charlie McClendon, City Manager

PURPOSE:

City Staff is requesting Council adopt an ordinance correcting the maps and legal descriptions included in ROW Annexation Ordinance 646-97 adopted in June 2, 1997.

DISCUSSION:

Ordinance 646-97 was adopted in June 2, 1997 which annexed several segments of right-of-way along Thomas Road, 107th Avenue, Indian School Road, McDowell Road, 127th Avenue, Encanto Blvd. and El Mirage Road. Staff has been notified by Maricopa County that mistakes with three of the maps and legal descriptions were discovered. Staff has been working with Huitt-Zollars, Maricopa County and the City Attorney to correct these maps and legal descriptions.

Maps and legal descriptions have been reviewed and revised as necessary. All parties involved have agreed that the best way to correct this problem is for Council to rescind the 1997 ordinance and adopt a new annexation ordinance with the new maps and legal descriptions. Once adopted, the new annexation ordinance will be processed and forwarded to the Board of Supervisors for approval.

RECOMENDATION:

Staff recommends that the City Council adopt a new ROW annexation ordinance rescinding Ordinance 646-97.

ATTACHMENTS:

Click to download

- Ordinance 646-97
- Ordinance 1225-1206 - ROW Annexation

When Recorded Mail To:

Linda Tyler
City of Avondale
525 N Central
Avondale Az
85323

OFFICIAL RECORDS OF
MARICOPA COUNTY RECORDER
HELEN PURCELL

97-0465587 07/10/97 10:14

MARTHA 1 OF 1

CAPTION HEADING:_____

DO NOT REMOVE
This is part of the official document.

In accordance with Arizona Revised Statutes §11-480, Requirements for form of instruments, this instrument should have been rejected for recording for the following reason(s). However, as a courtesy, this cover sheet has been added to allow recording. Future instruments presented for recording that do not comply will be rejected:

☐ Effective January 1, 1991, each instrument shall be no larger than eight and one-half inches in width and no longer than fourteen inches and shall have a print size no smaller than ten point type.

☒ The first page shall have a top margin of at least two inches which shall be reserved for recording information. The left three and one-half inches of the top margin of the first page or sheet may be used by the public to show the name of the person requesting recording and the name and address to which the document is to be returned following recording. IF THE FIRST PAGE OF THE INSTRUMENT DOES NOT COMPLY WITH THE TOP MARGIN REQUIREMENTS, A SEPARATE SHEET THAT MEETS THE REQUIREMENTS AND THAT REFLECTS THE TITLE OF THE DOCUMENT AS REQUIRED BY ARS §11-480.A.1, SHALL BE ATTACHED TO THE FRONT OF THE DOCUMENT **BY THE PARTY REQUESTING RECORDING.**

97046558?

ORDINANCE NO. 646-97

AN ORDINANCE OF THE MAYOR AND COUNCIL OF THE CITY OF AVONDALE, MARICOPA COUNTY, ARIZONA EXTENDING AND INCREASING THE CORPORATE LIMITS OF THE CITY PURSUANT TO A.R.S. 9-471.N BY ANNEXING THERETO CERTAIN COUNTY RIGHTS OF WAY CONTIGUOUS TO THE EXISTING CITY LIMITS AND HAVING NO TAXABLE REAL PROPERTY AND PROVIDING FOR AN EFFECTIVE DATE.

THEREFORE, it is ordained by the Mayor and Council of the City of Avondale as follows:

SECTION 1. That attached hereto and marked as Exhibit "A" is the legal description of certain real property contiguous to the existing city limits of the City of Avondale, Arizona.

SECTION 2. That attached hereto and marked as exhibit "B" is a map depicting the real property described in exhibit "A".

SECTION 3. That the Mayor and Council of the City of Avondale find:

A. The property described in Exhibit "A" consists of a County Right of Way.

B. The property described in Exhibit "A" contains no taxable real property.

C. That the Mayor and Council of the City of Avondale, Arizona is vested with jurisdiction pursuant to A.R.S. 9-471.N to proceed to annex the property described in Exhibit "A" which is adjacent to the City of Avondale for the entire length of the annexation upon approval of the Maricopa County Board of supervisors.

SECTION 4. That pursuant to A.R.S. 9-471.N, the Mayor and Council of the City of Avondale, Arizona declare the property described in Exhibit "A" as annexed to the City of Avondale, Arizona contingent upon the fulfillment of the conditions set forth in A.R.S. 9-471.N.

SECTION 5. That the City Clerk is hereby directed to certify a copy of this Ordinance and file same with the Clerk of the Board of Supervisors of Maricopa County and request that the County Board of Supervisors approve this annexation at a duly noticed and posted regular meeting of the Board of Supervisors.

SECTION 6. This Ordinance shall become effective upon the approval of the annexation by the Maricopa County Board of Supervisors, pursuant to A.R.S. 9-471.N., or if previously accepted by the Maricopa County Board of Supervisors, effective immediately.

PASSED AND ADOPTED by the Mayor and Council of the City of Avondale, Arizona this 2nd day of June, 1997.

Mayor Thomas F. Morales, Jr.

ATTEST:

LINDA M. TYLER, CITY CLERK

APPROVED AS TO FORM:

FRANK L. ROSS, CITY ATTORNEY

97046557

AFFIDAVIT

Linda M. Tyler, being first duly sworn, deposes and says:

1. I am the City Clerk for the City of Avondale, Maricopa County, Arizona.

2. I am the custodian of all records of that City including all records relating to annexation.

3. I hereby verify that no portion of the territory included in the current Petition for Annexation is included in any previously filed Annexation Petition.

Linda M. Tyler

STATE OF ARIZONA)
) ss.
County of Maricopa)

SUBSCRIBED AND SWORN to before me this 23 day of 1996.

OFFICIAL SEAL
Sharon K. Barton
Notary Public-Arizona
Maricopa County
My Commission Expires 10/19/96

My commission expires

Sharon K. Barton
Notary Public

THOMAS ROAD

That portion of Sections 25,26, 35 and 36, Township 2 North, Range 1 West and Sections 29, 30, 31 and 32, Township 2 North, Range 1 East of the Gila and Salt River Base and Meridian, Maricopa County, Arizona, more particularly described as follows:

Section 25
The South 40.00 feet thereof.

Section 26
The South 40.00 feet thereof;
EXCEPT: The West 40.00 feet.

Section 35
The North 40.00 feet thereof.
EXCEPT: The West 40.00 feet.

Section 36
The North 40.00 feet thereof.

Section 29
The South 75.00 feet of the Southwest quarter.

Section 30
The South 33.00 feet and the South 22.00 feet of the North 55.00 feet of the East 33.00 feet thereof;
EXCEPT: The East 35.00 feet of the West 68.00 feet.

Section 31
The North 33.00 feet thereof;
EXCEPT: The East 35.00 feet of the West 68.00 feet.

Section 32
The North 55.00 feet of the Northwest quarter.

97046558?

CITY OF AVONDALE

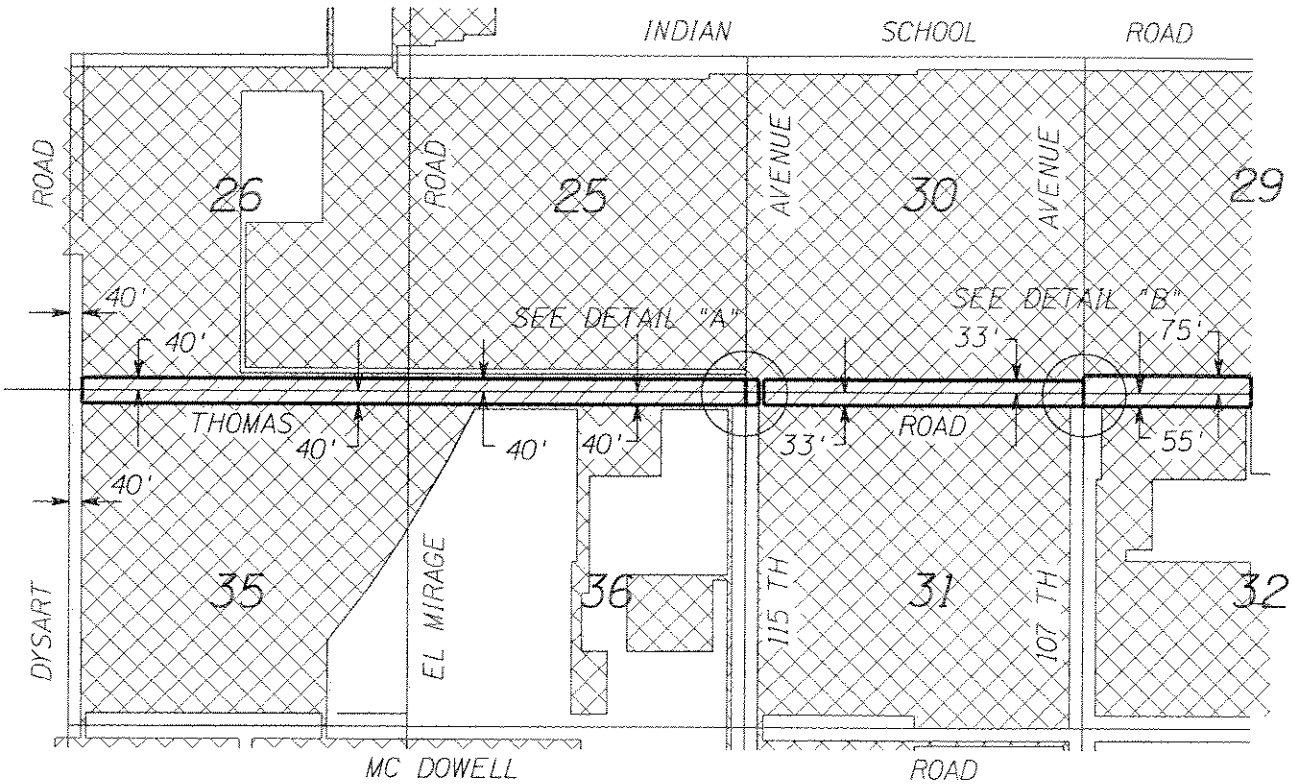

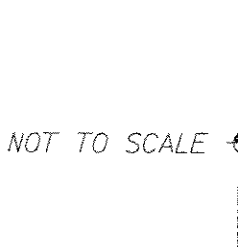

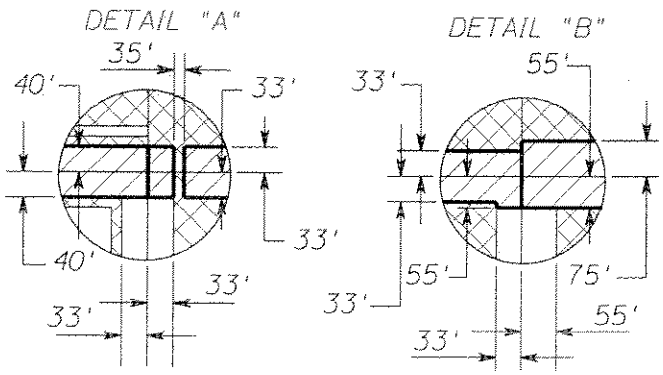

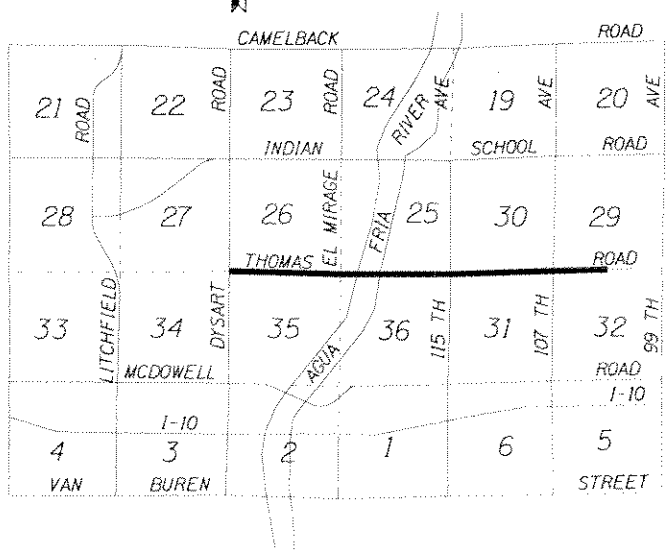

= AREA TO BE ANNEXED

= CITY OF AVONDALE

EXHIBIT B

VICINITY MAP
N.T.S.

SECTIONS 25, 26, 35 & 36
T. 2 N., R. 1 W.

SECTIONS 29, 30, 31 & 32
T. 2 N., R. 1 E.

1B

107 TH AVENUE

That portion of Sections 35 and 36, Township 2 North, Range 1 West and Sections 5 and 6, Township 1 North, Range 1 East Gila and Salt River Base and Meridian, Maricopa County, Arizona, more particularly described as follows:

Section 5
The North 33.00 feet of the West 33.00 feet.

Section 6
The North 23.00 feet of the East 33.00 feet and the South 10.00 feet of the North 33.00 feet of the East 23.00 feet.

Section 31
The East 33.00 feet thereof;
EXCEPT: The North 55.00 feet.

Section 32
The West 33.00 feet of Section 32 and the East 22.00 feet of the Northwest quarter of the Northwest quarter;
EXCEPT: The North 55.00 feet.

97104655B7

CITY OF AVONDALE

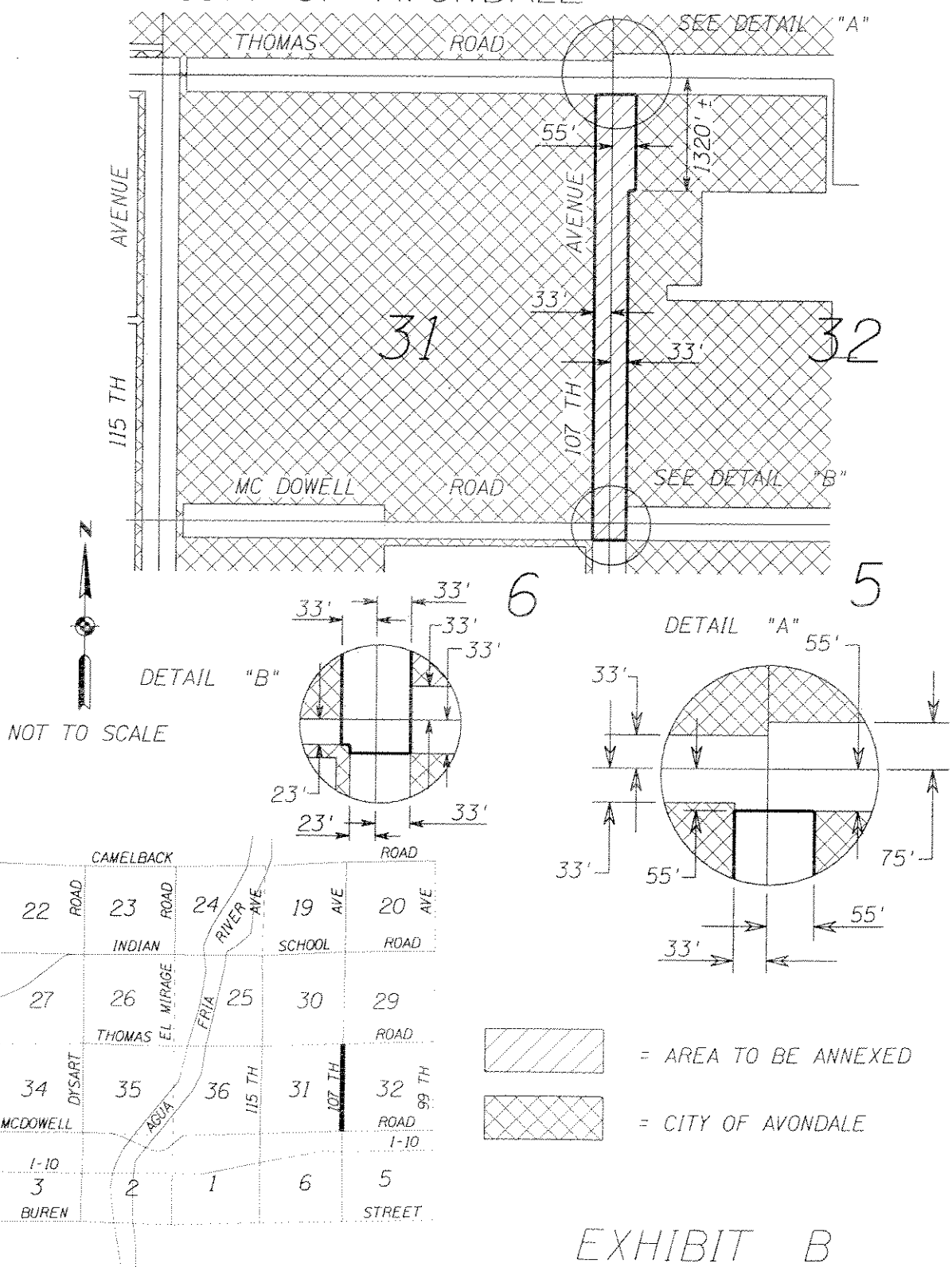

EXHIBIT B

VICINITY MAP
N.T.S.

SECTIONS 31 & 32
T. 2 N., R. 1 E.

SECTIONS 5 & 6
T. 1 N., R. 1 E.

2B

INDIAN SCHOOL ROAD

That portion of Sections 22, 23, 24, 25, 26 and 27, Township 2 North, Range 1 West of the Gila and Salt River Base and Meridian, Maricopa County, Arizona, more particularly described as follows:

Section 22
The South 33.00 feet of the East 40.00 feet.

Section 23
The South 33.00 feet of the Southwest quarter and the Southwest quarter of the Southeast quarter
EXCEPT: The East 25.00 feet;

The South 33.00 feet of the Southeast quarter of the Southeast quarter
EXCEPT: The East 10.00 feet of the West 40.00 feet, and the West 10.00 feet of the East 65.00 feet;

The North 42.00 feet of the South 75.00 feet of the East 55.00 feet of the Southeast quarter.

Section 24
The South 75.00 feet of the West 55.00 feet.

Section 25
The South 102.00 feet of the West 55.00 feet.

Section 26
The North 55.00 feet thereof
EXCEPT: The East 10.00 feet of the West 40.00 feet of the Northeast quarter of the Northeast quarter and the East 65.00 feet;

The North 102.00 feet of the East 55.00 feet.

Section 27
The North 55.00 feet of the East 40.00 feet.

97R465587

CITY OF AVONDALE

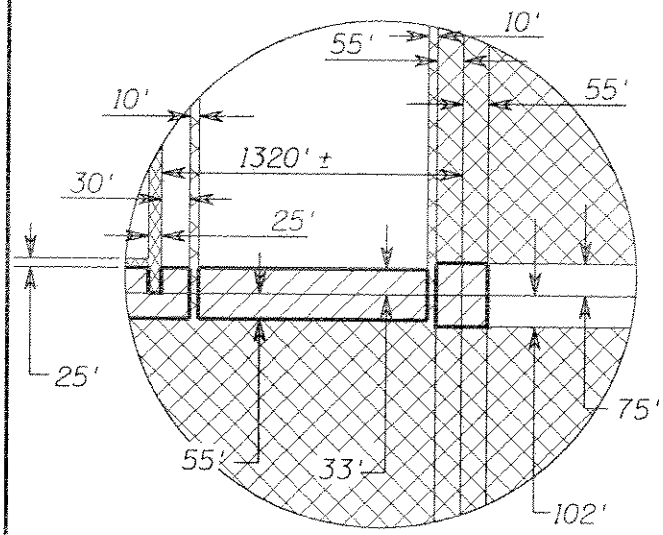

DETAIL "A"

NOT TO SCALE

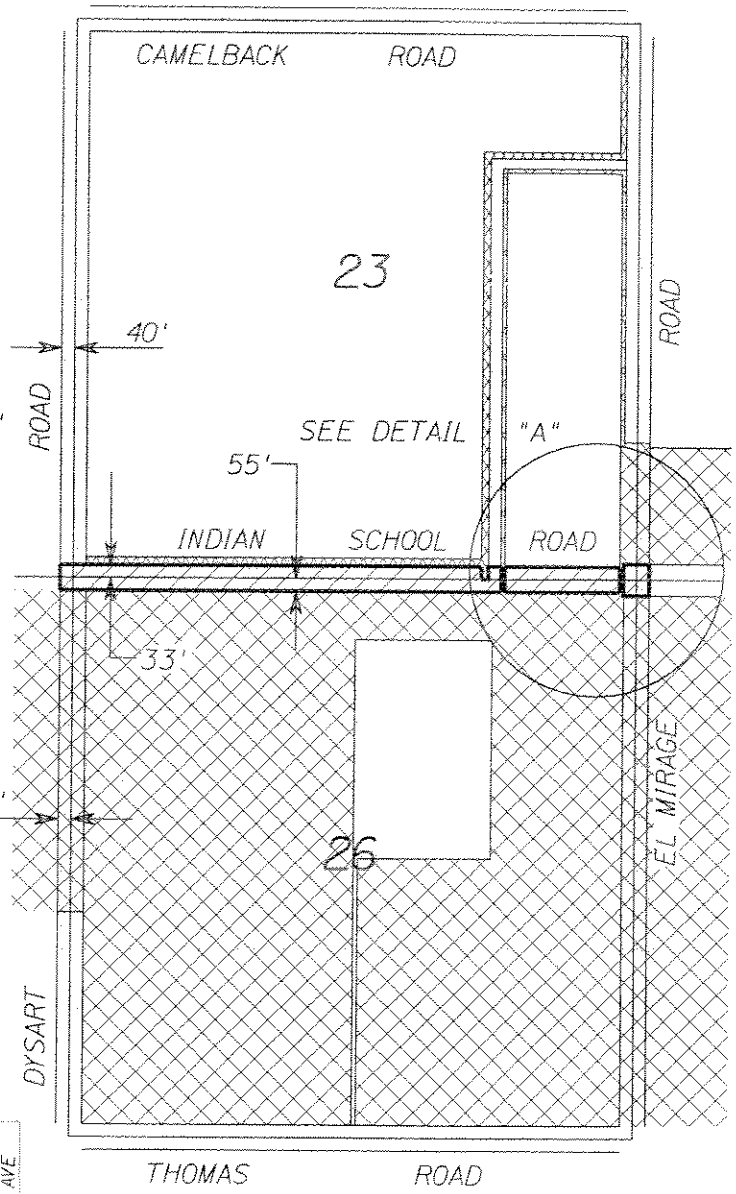

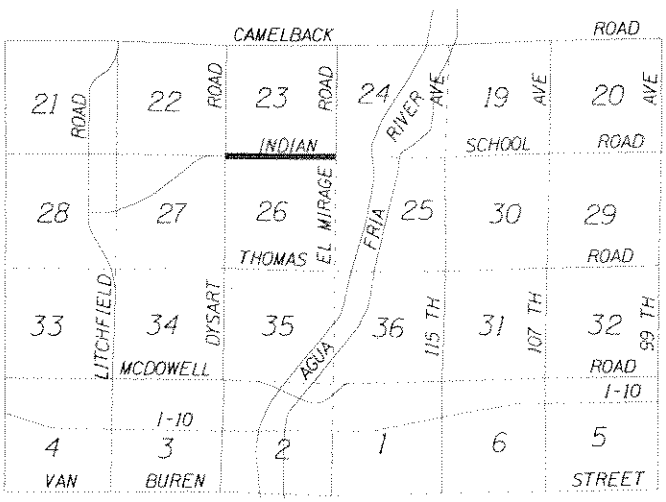

VICINITY MAP
N.T.S.

= AREA TO BE ANNEXED

= CITY OF AVONDALE

= CITY OF LITCHFIELD PARK

EXHIBIT B

SECTIONS 22, 23, 24, 25, 26 & 27
T. 2 N., R. 1 W.

3C

97046558?

MCDOWELL ROAD

That portion of Sections 1 and 2, Township 1 North, Range 1 West and Section 6, Township 1 North, Range 1 East and Sections 35 and 36, Township 2 North, Range 1 West and Section 31, Township 2 North, Range 1 East of the Gila and Salt River Base and Meridian, Maricopa County, Arizona, more particularly described as follows:

Section 1
The North 40.00 feet thereof;
EXCEPT: The West 25.00 feet of the East 58.00 feet.

Section 2
The North 40.00 feet thereof;
EXCEPT: The West 65.00 feet and the East 10.00 feet of the Northwest quarter of the Northeast quarter.

Section 6
The North 23.00 feet thereof;
EXCEPT: The East 35.00 feet of the West 68.00 feet and the East 33.00 feet.

Section 31
The South 60.00 feet of the Southwest quarter;
EXCEPT: The East 35.00 feet of the West 68.00 feet.

AND

BEGINNING at the point of intersection of the North line of the South 60 feet with East line of the West 68 feet of said section 3: THENCE Easterly along said North line of the South 60 feet a distance of 10 feet to a point; THENCE Northwesterly to a point on the said East line of the West 68 feet that is 10 feet North of the point intersection; THENCE Southerly along said East line a distance of 10 feet to the point of BEGINNING.

Section 35
The South 40.00 feet thereof;
EXCEPT: The West 65.00 feet and the East 10.00 feet of the Southwest quarter of the Southeast quarter.

Section 36
The South 40.00 feet thereof;
EXCEPT: The West 25.00 feet of the East 58.00 feet.

REV. 2-18

4A

97065587

CITY OF AVONDALE

SHEET 1 OF 2

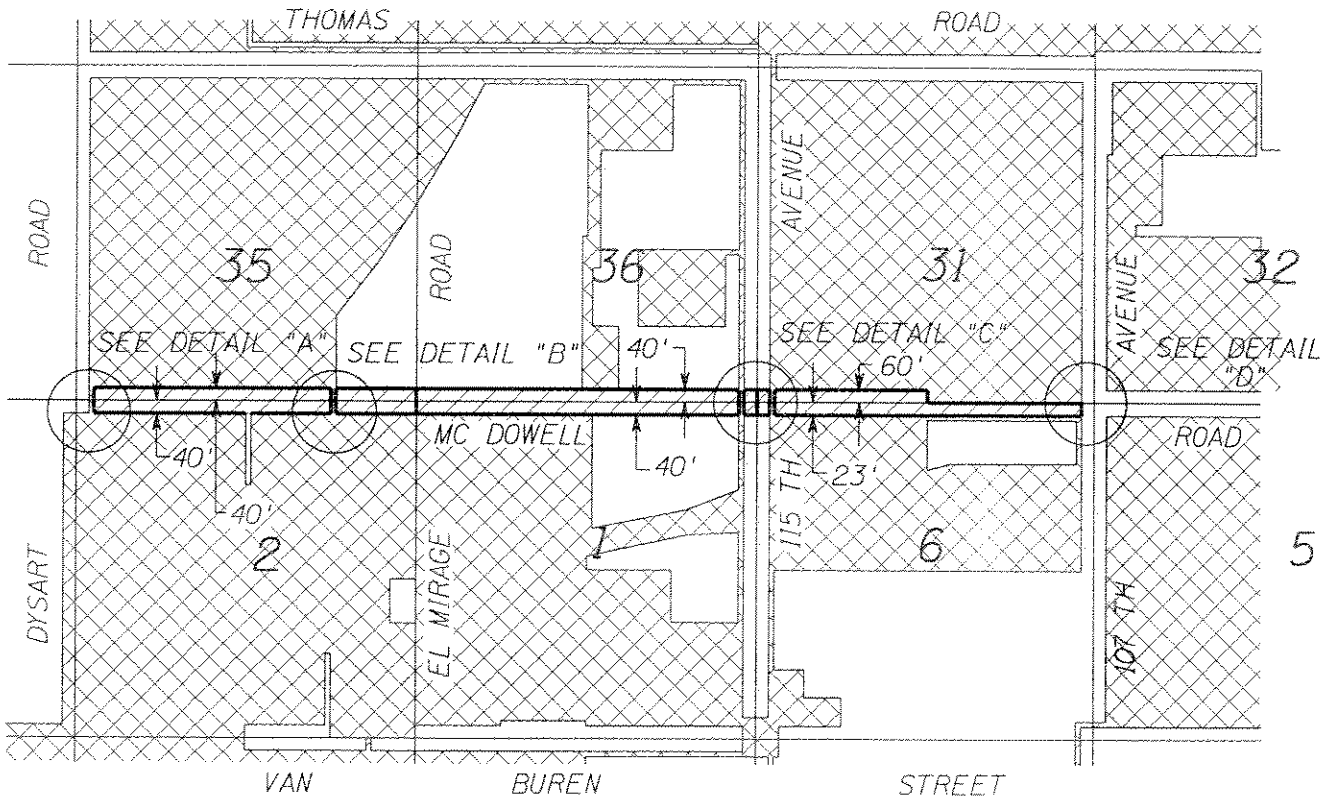

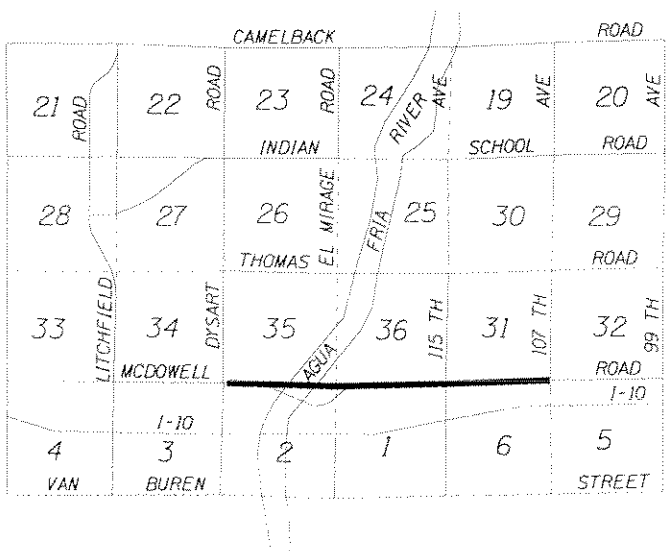

VICINITY MAP
N.T.S.

NOT TO SCALE

= AREA TO BE ANNEXED

= CITY OF AVONDALE

EXHIBIT B

SECTIONS 35 & 36
T. 2 N., R. 1 W.

SECTIONS 31 & 32
T. 2 N., R. 1 E.

SECTIONS 1 & 2
T. 1 N., R. 1 W.

SECTIONS 5 & 6
T. 1 N., R. 1 E.

4B

97046558?

CITY OF AVONDALE

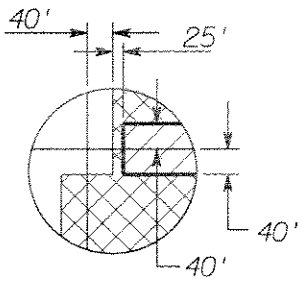

DETAIL "A"

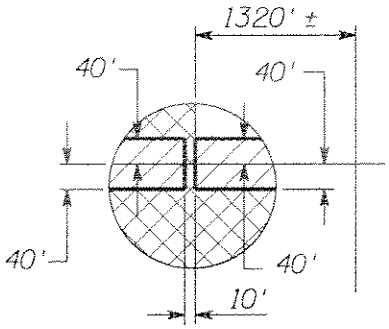

DETAIL "B"

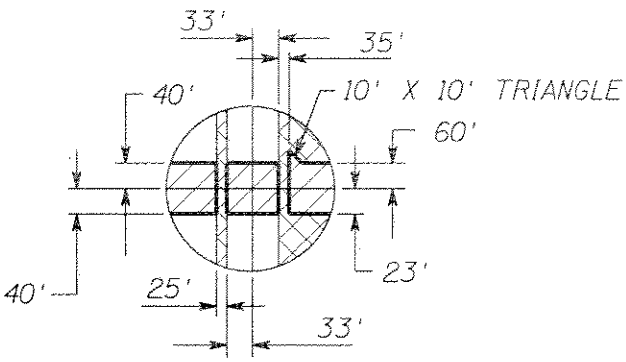

DETAIL "C"

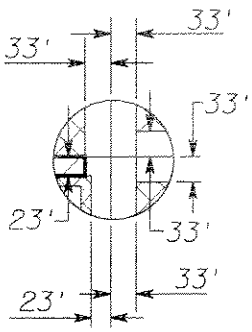

DETAIL "D"

NOT TO SCALE

= AREA TO BE ANNEXED

= CITY OF AVONDALE

EXHIBIT B

SECTIONS 35 & 36
T. 2 N., R. 1 W.

SECTIONS 31 & 32
T. 2 N., R. 1 E.

SECTIONS 1 & 2
T. 1 N., R. 1 W.

SECTIONS 5 & 6
T. 1 N., R. 1 E.

4C

97046587

127 TH AVENUE

The West 10.00 feet of the Northwest quarter of the Northeast quarter of Section 2, Township 2 North, Range 1 West Gila and Salt River Base and Meridian, Maricopa County, Arizona:

EXCEPT: North 40.00 feet.

5A

97046558?

CITY OF AVONDALE

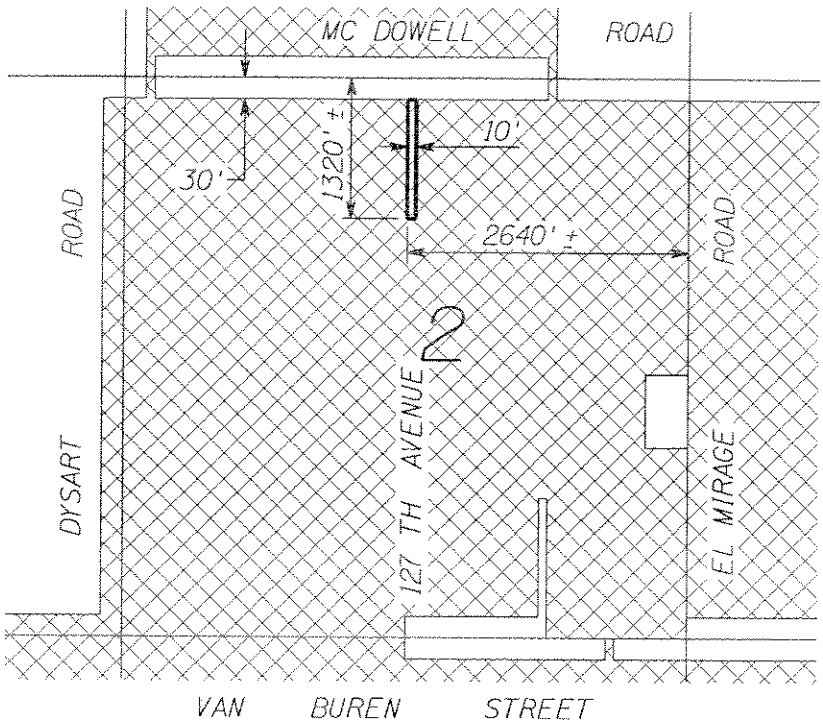

NOT TO SCALE

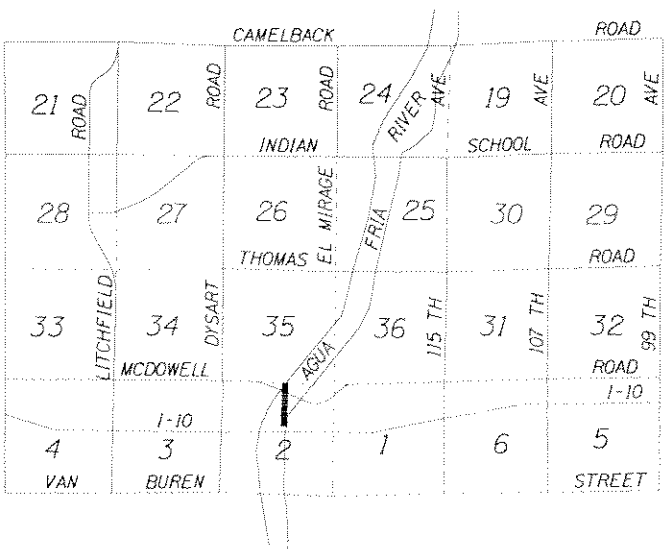

= AREA TO BE ANNEXED

= CITY OF AVONDALE

EXHIBIT B

VICINITY MAP
N.T.S.

SECTION 2
T. 1 N., R. 1 W.

SB

97046587

ENCANTO BOULEVARD

The North 33.00 feet of the Southeast quarter and the South 33.00 feet of the Northeast quarter of Section 36, Township 2 North, Range 1 West Gila and Salt River Base and Meridian, Maricopa County, Arizona:

EXCEPT: West 70.00 feet and the East 58.00 feet.

6A

97046558?

CITY OF AVONDALE

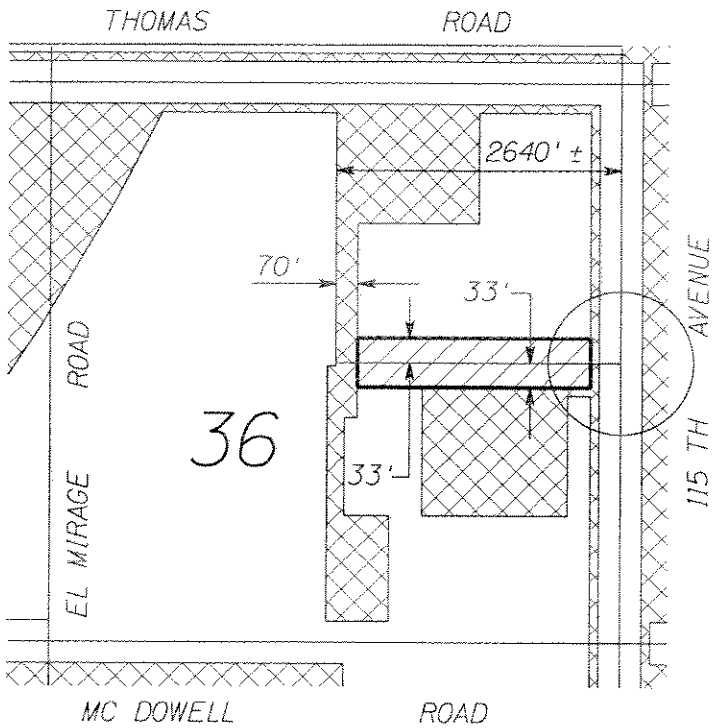

NOT TO SCALE

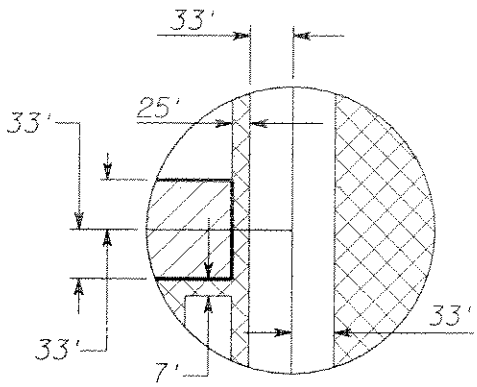

DETAIL "A"

= AREA TO BE ANNEXED

= CITY OF AVONDALE

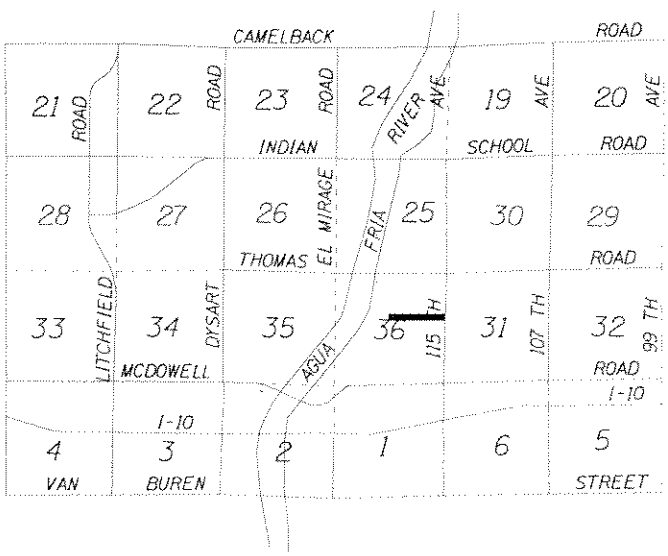

VICINITY MAP
N.T.S.

EXHIBIT B

SECTION 36
T. 2 N., R. 1 W.

6B

EL MIRAGE ROAD

That portion of Sections 35 and 36, Township 2 North, Range 1 West Gila and Salt River Base and Meridian, Maricopa County, Arizona, more particularly described as follows:

Section 35

The East 33.00 feet of that portion of Section 35 lying South of the Northwesterly Right of Way line of the Aqua Fria River Channel

EXCEPT: South 40.00 feet.

Section 36

The West 33.00 feet of that portion of Section 36 lying South of the Northwesterly Right of Way line of the Aqua Fria River Channel

EXCEPT: South 40.00 feet.

97046558?

CITY OF AVONDALE

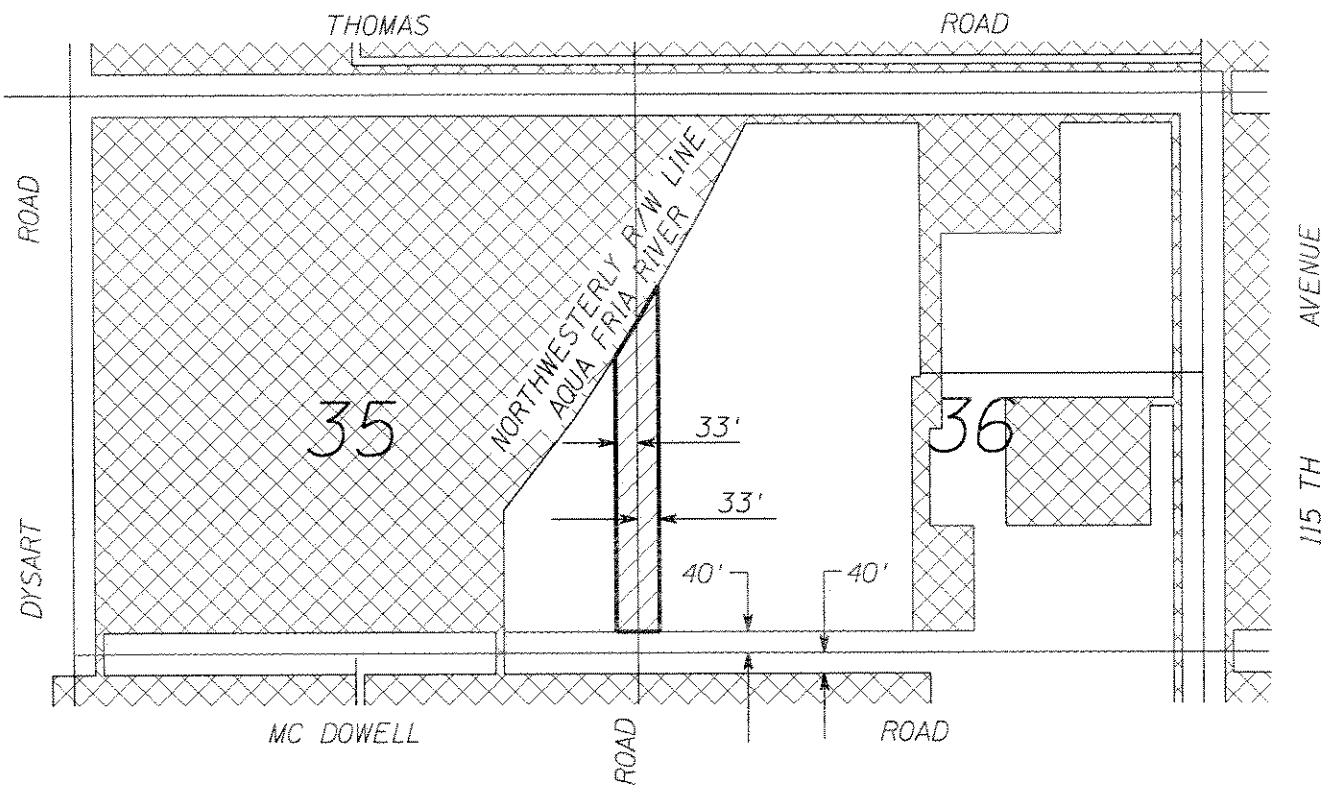

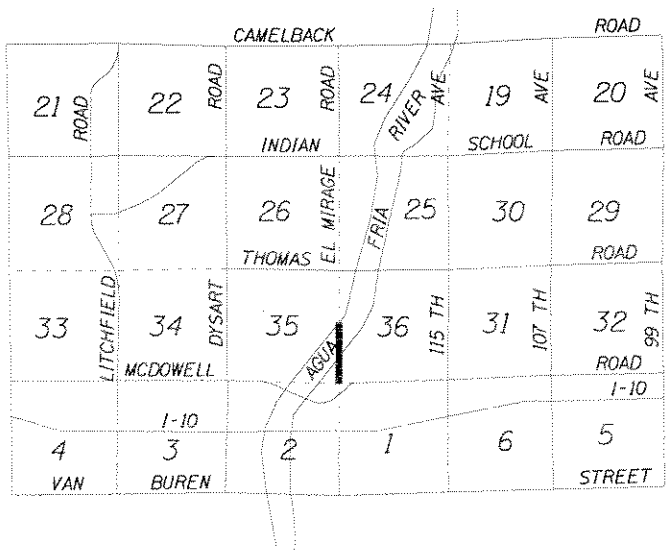

VICINITY MAP
N.T.S.

NOT TO SCALE

= AREA TO BE ANNEXED

= CITY OF AVONDALE

EXHIBIT B

SECTIONS 35 & 36
T. 2 N., R. 1 W.

REV. 2-18

7B

ORDINANCE NO. 1225-1206

AN ORDINANCE OF THE COUNCIL OF THE CITY OF AVONDALE, ARIZONA, REPEALING ORDINANCE NO. 646-97 AND EXTENDING AND INCREASING THE CORPORATE LIMITS OF THE CITY OF AVONDALE BY ANNEXING THERETO MARICOPA COUNTY RIGHTS-OF-WAY.

WHEREAS, on June 2, 1997, the Council of the City of Avondale (the "City Council") passed and adopted Ordinance No. 646-97 approving the annexation of certain real property (the "Original Ordinance"); and

WHEREAS, the annexation area described and depicted in the Original Ordinance contained incorrect legal descriptions and maps; and

WHEREAS, the City Council desires to correct the errors in the Original Ordinance; and

WHEREAS, the City Council desires to extend the corporate boundaries of the City of Avondale (the "City"); and

WHEREAS, ARIZ. REV. STAT. § 9-471(N) allows for the annexation of county right-of-way containing no taxable real property into an adjacent city if the property to be annexed is adjacent to the city for the entire length of the annexation and if the city and the county each approve the proposed annexation as a published agenda item at a regular public meeting of their governing bodies; and

WHEREAS, the property proposed for annexation (i) consists entirely of Maricopa County right-of-way, containing no taxable real property and (ii) is adjacent to the City for its entire length; and

WHEREAS, this Ordinance has been duly posted as an agenda item at a regular meeting of the City Council.

NOW, THEREFORE, BE IT ORDAINED BY THE COUNCIL OF THE CITY OF AVONDALE as follows:

SECTION 1. That Ordinance No. 646-97 is hereby repealed.

SECTION 2. That certain parcels of land in Maricopa County, Arizona, as more particularly described and depicted in Exhibit A, attached hereto and incorporated herein by reference (the "Annexation Area"), are hereby annexed into the corporate boundaries of the City.

SECTION 3. That the City Clerk is hereby authorized and directed to file with the Maricopa County Recorder's Office a fully executed copy of this Ordinance, together with an accurate map of the Annexation Area.

SECTION 4. If any provision of this Ordinance is for any reason held by any court of competent jurisdiction to be unenforceable, such provision or portion hereof shall be deemed separate, distinct and independent of all other provisions and such holding shall not affect the validity of the remaining portions of this Ordinance.

PASSED AND ADOPTED by the Council of the City of Avondale, December 18, 2006.

_____
Marie Lopez-Rogers, Mayor

ATTEST:

_____
Linda M. Farris, City Clerk

APPROVED:

_____
Andrew J. McGuire, City Attorney

EXHIBIT A
TO
ORDINANCE NO. 1225-1206

[Legal description and map of the Annexation Area]

See following pages.

THOMAS ROAD

Those portions of Sections 25, 26, 35, and 36, Township 2 North, Range 1 West and Sections 29, 30, 31 and 32, Township 2 North, Range 1 East of the Gila and Salt River Base and Meridian, Maricopa County, Arizona, more particularly described as follows:

SECTION 25

The South 40.00 feet thereof.

SECTION 26

The South 40.00 feet thereof;
EXCEPT the West 40.00 feet.

SECTION 35

The North 40.00 feet thereof;
EXCEPT the West 40.00 Feet.

SECTION 36

The North 40.00 feet thereof;
Together with the South 25.00 feet of the North 65.00 feet of the East 33.00 thereof.

SECTION 29

The South 75.00 feet of the Southwest Quarter of said Section.

SECTION 30

The South 33.00 feet thereof;
EXCEPT the West 68.00 feet;

Together with the South 40.00 feet of the West 33.00 feet thereof.

SECTION 31

The North 33.00 feet thereof;
EXCEPT the East 35.00 feet of the West 68.00 feet.

Together with the South 22.00 feet of the North 55.00 feet of the East 33.00 feet thereof.

SECTION 32

The North 55.00 feet of the Northwest Quarter of said Section.

REGISTERED LAND SURVEYOR
CERTIFICATE NO.
33874
DANIEL G.
FRANCETIC
Date Signed 12-1-2006
ARIZONA U.S.A.

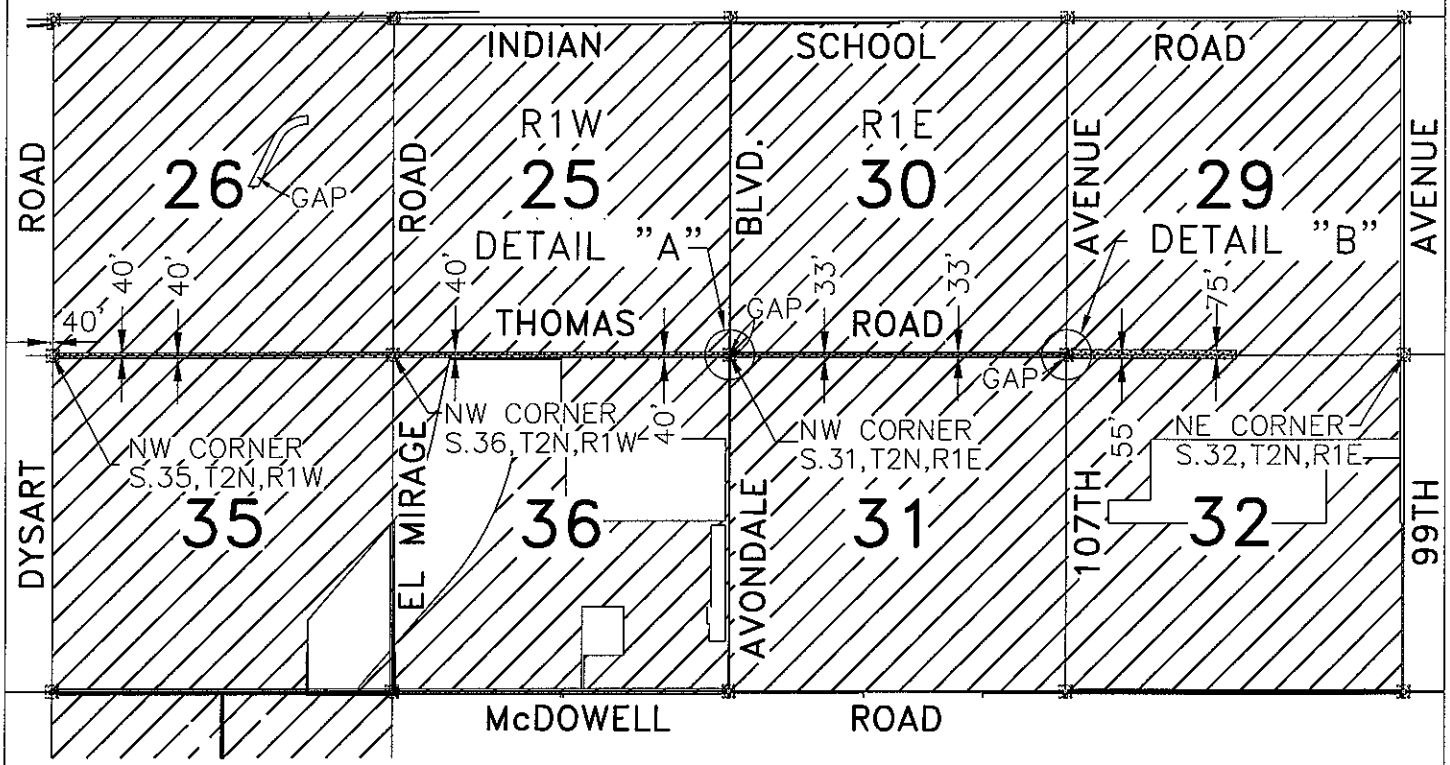

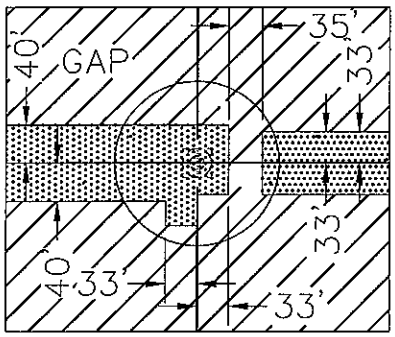

DETAIL "A"
1'=200'

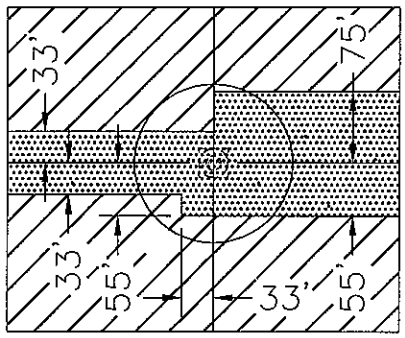

DETAIL "B"
1'=200'

REGISTERED LAND SURVEYOR
CERTIFICATE NO.
33874
DANIEL G.
FRANCETIC
Date Signed 12-1-2006
ARIZONA, U.S.A.

NORTH

1"=3000'

TO BE ANNEXED

EXISTING CITY LIMITS

S. 25, 26, 35 & 36, T.2N., R.1W.
AND
S. 29, 30, 31 & 32, T.2N., R.1E.

ANNEXATION PLAT

CITY OF AVONDALE, ARIZONA

WE HEREBY CERTIFY THAT THIS IS AN ACCURATE PLAT OF TERRITORY ANNEXED TO THE CITY OF AVONDALE, ARIZONA BY ORDINANCE NO.

MAYOR _____ DATE _____

CLERK _____ DATE _____

HUITT-ZOLLARS
Huitt-Zollars, Inc. Phoenix
426 North 44th Street, Suite 300
Phoenix, Arizona 85008-6596
Phone (602) 952-9123 Fax (602) 952-9124

H:\proj\05154407\dwg\Exhibits\05154407_Thomas Road Annexation Exhibit.dwg 12/1/2006 4:42:54 PM UMST

107TH AVENUE

That portion of Sections 35 and 36, Township 2 North, Range 1 West and Sections 5 and 6, Township 1 North, Range 1 East of the Gila and Salt River Base and Meridian, Maricopa County, Arizona, more particularly described as follows:

Section 5
The North 35.00 feet of the West 33.00 feet.

Section 6
The North 23.00 feet of the East 33.00 feet and the South 10.00 feet of the North 33.00 feet of the East 23.00 feet.

Section 31
The East 33.00 feet thereof;
EXCEPT: The North 55.00 feet.

Section 32
The West 33.00 feet of Section 32 and the East 22.00 feet of the Northwest quarter of the Northwest quarter;
EXCEPT: The North 55.00 feet.

REGISTERED LAND SURVEYOR
CERTIFICATE NO.
13572
LARI D.
SPIRE
Date Signed 12-8-04
ARIZONA U.S.A.

97104655B7

CITY OF AVONDALE

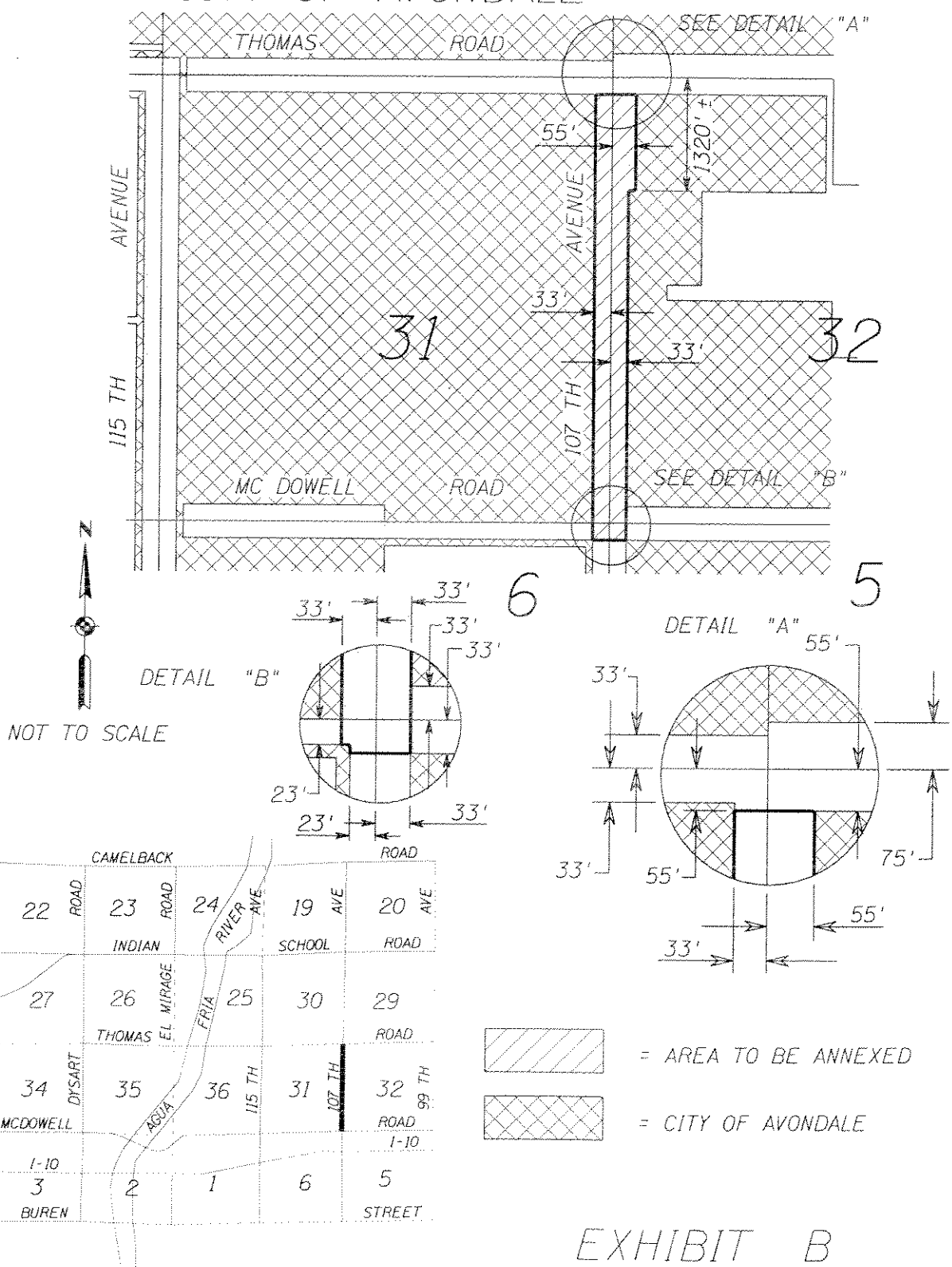

EXHIBIT B

VICINITY MAP
N.T.S.

SECTIONS 31 & 32
T. 2 N., R. 1 E.

SECTIONS 5 & 6
T. 1 N., R. 1 E.

2B

INDIAN SCHOOL ROAD

Those portions of Sections 22, 23, 24, 25, 26 and 27, Township 2 North, Range 1 West of the Gila and Salt River Base and Meridian, Maricopa County, Arizona, more particularly described as follows:

SECTION 22

The South 33.00 feet of the East 40.00 feet thereof.

SECTION 23

The South 33.00 feet of the Southwest Quarter and the Southwest Quarter of the Southeast Quarter of said Section;
EXCEPT the East 25.00 feet.

The South 33.00 feet of the Southeast Quarter of the Southeast Quarter of said Section;
EXCEPT the East 10.00 feet of the West 40.00 feet;
And also EXCEPT the East 65.00 feet;

The South 75.00 feet of the East 55.00 feet of the Southeast Quarter of said Section.

SECTION 24

The South 75.00 feet of the West 55.00 feet thereof.

SECTION 25

The North 102.00 feet of the West 55.00 feet thereof.

SECTION 26

The North 55.00 feet thereof;
EXCEPT the East 10.00 feet of the West 40.00 feet of the Northeast Quarter of the Northeast Quarter;
And also EXCEPT the East 65.00 feet;

The North 102.00 feet of the East 55.00 feet thereof.

SECTION 27

The North 55.00 feet of the East 40.00 feet.

REGISTERED LAND SURVEYOR
CERTIFICATE NO.
33874
DANIEL G.
FRANCETIC
Date Signed 12-1-2006
ARIZONA U.S.A.

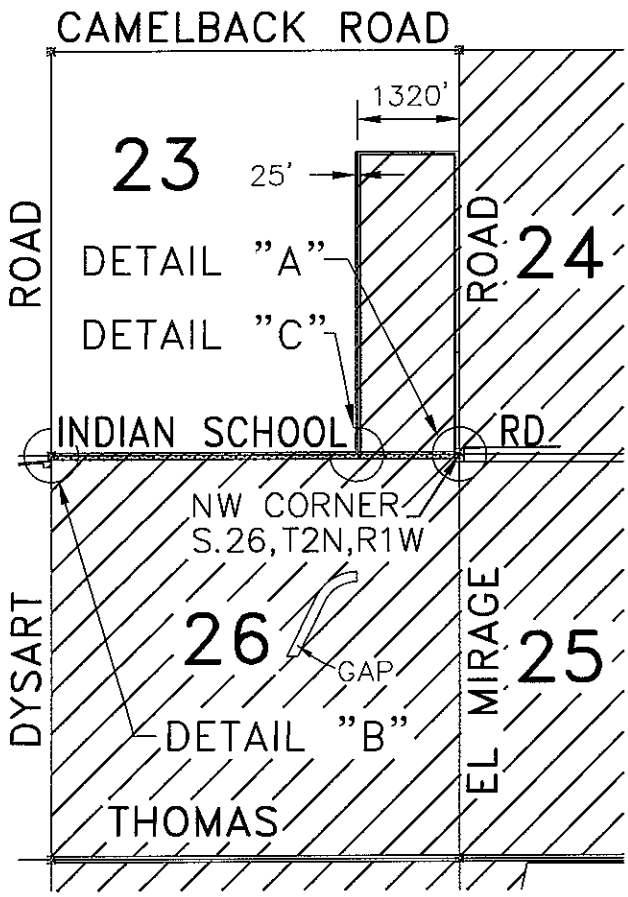

SECTIONS 22, 23, 24, 25, 26 & 27
TOWNSHIP 2 NORTH, RANGE 1 WEST

ANNEXATION PLAT

CITY OF AVONDALE, ARIZONA

WE HEREBY CERTIFY THAT THIS IS AN ACCURATE PLAT OF TERRITORY ANNEXED TO THE CITY OF AVONDALE, ARIZONA BY ORDINANCE NO.

MAYOR _____ DATE _____

CLERK _____ DATE _____

REGISTERED LAND SURVEYOR
CERTIFICATE NO.
33874
DANIEL G.
FRANCETIC
Date Signed 12-1-2006
ARIZONA, U.S.A.

HUITT-ZOLLARS
Huitt-Zollars, Inc. Phoenix
426 North 44th Street, Suite 300
Phoenix, Arizona 85008-6596
Phone (602) 952-9123 Fax (602) 952-9124

NORTH

1"=2000'

CITY OF LITCHFIELD PARK

TO BE ANNEXED

EXISTING AVONDALE CITY LIMITS

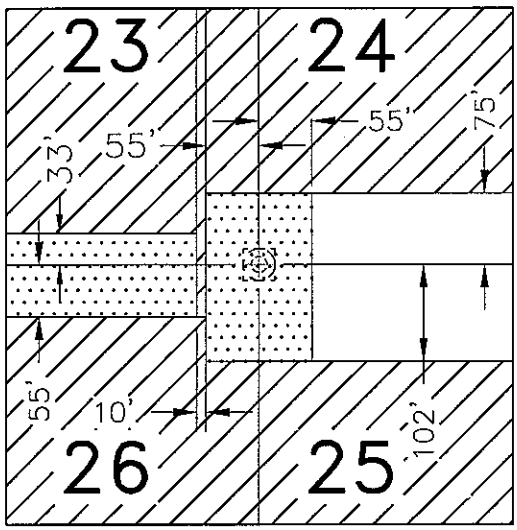

DETAIL "A" (N.T.S.)

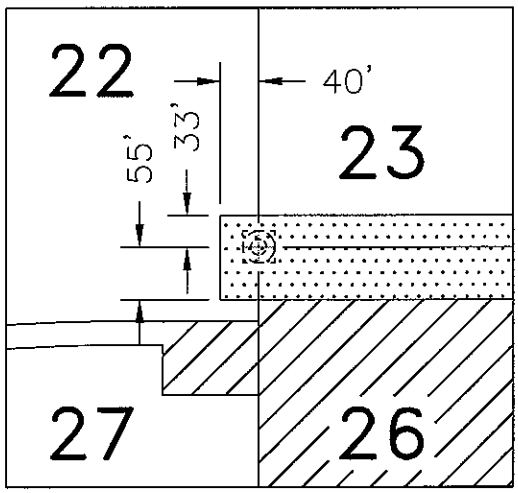

DETAIL "B" (N.T.S.)

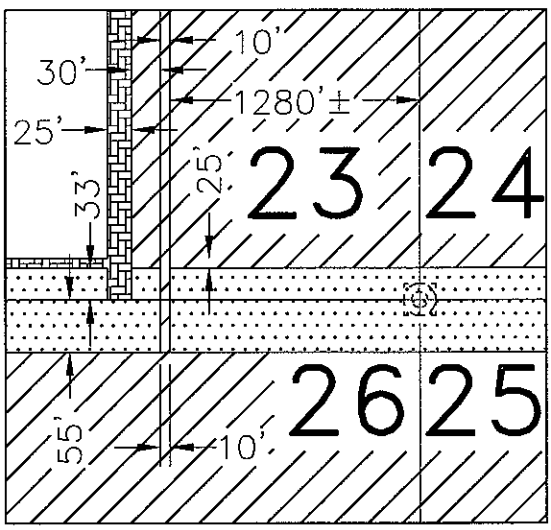

DETAIL "C" (N.T.S.)

H:\proj\05154407\dwg\Exhibits\05154407_Indian school Road Annexation Exhibit.dwg 12/1/2006 4:41:29 PM UMST

MCDOWELL ROAD

That portion of Sections 1 and 2, Township 1 North, Range 1 West and Section 6, Township 1 North, Range 1 East and Sections 35 and 36 Township 2 North, Range 1 West and Section 31, Township 2 North, Range 1 East of the Gila and Salt River Base and Meridian, Maricopa County, Arizona, more particularly described as follows:

Section 1
The North 40.00 feet thereof;
EXCEPT: The West 25.00 feet of the East 58.00 feet.

Section 2
The North 40.00 feet thereof:
EXCEPT: The West 65 00 feet and the East 10.00 feet of the Northwest quarter of the Northeast quarter.

Section 6
The North 23.00 feet thereof;
EXCEPT: The East 35.00 feet of the West 68.00 feet and the East 33.00 feet.

Section 31
The South 60.00 feet of the Southwest quarter;
EXCEPT The East 35.00 feet of the West 68.00 feet.

AND

BEGINNING at the point of intersection of the North line of the South 60 feet with East line of the West 68 feet of said Section 3; THENCE Easterly along said North line of the South 60 feet a distance of 10 feet to a point; THENCE Northwesterly to a point on the said East line of the West 68 feet that is 10 feet North of the point intersection; THENCE Southerly along said East line a distance of 10 feet to the point of BEGGINING.

Section 35
The South 40.00 feet thereof;
EXCEPT: The West 65.00 feet and the East 10.00 feet of the Southwest quarter of the Southeast quarter.

Section 36
The South 40.00 feet thereof;
EXCEPT: The West 25.00 feet of the East 58.00 feet.

REGISTERED LAND SURVEYOR
CERTIFICATE NO.
13572
LARI D.
SPIRE
Date Signed 12-8-06
ARIZONA U.S.A.

97065587

CITY OF AVONDALE

SHEET 1 OF 2

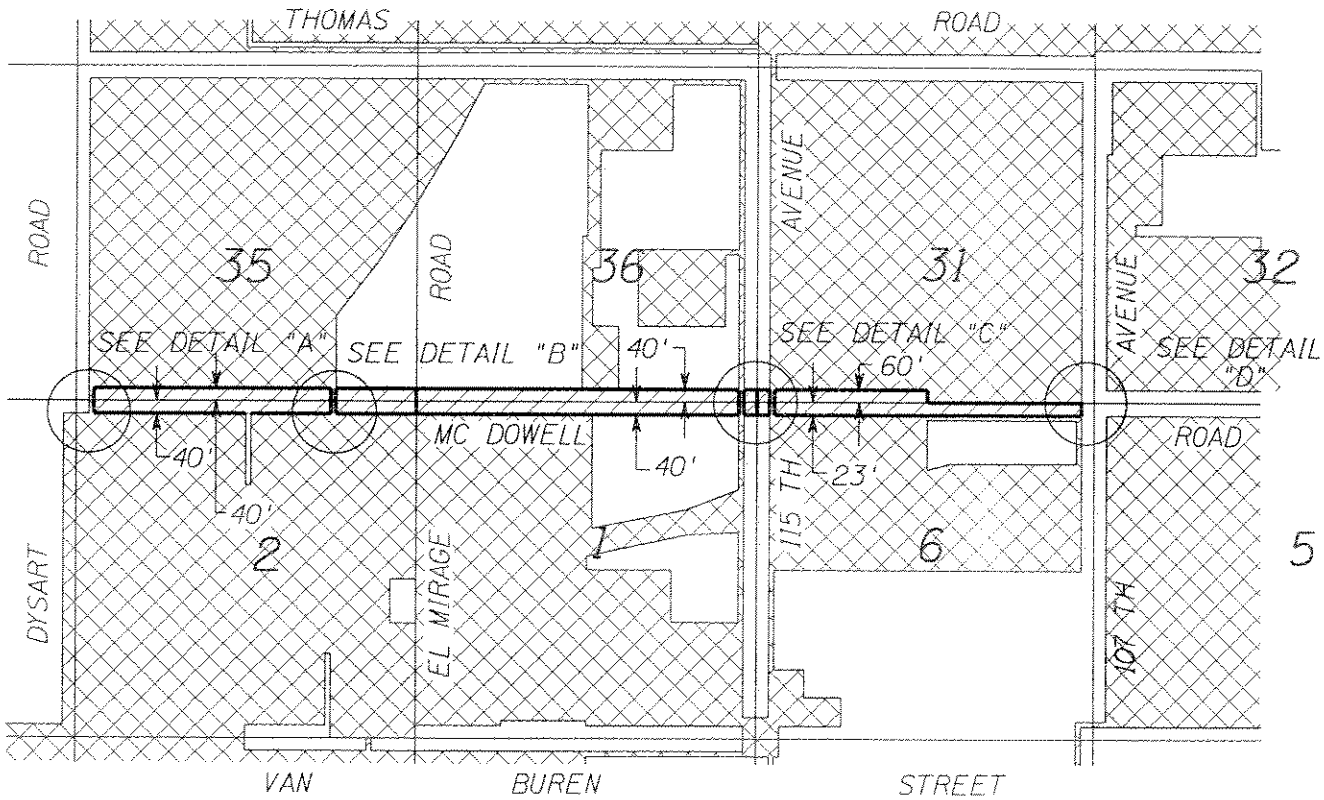

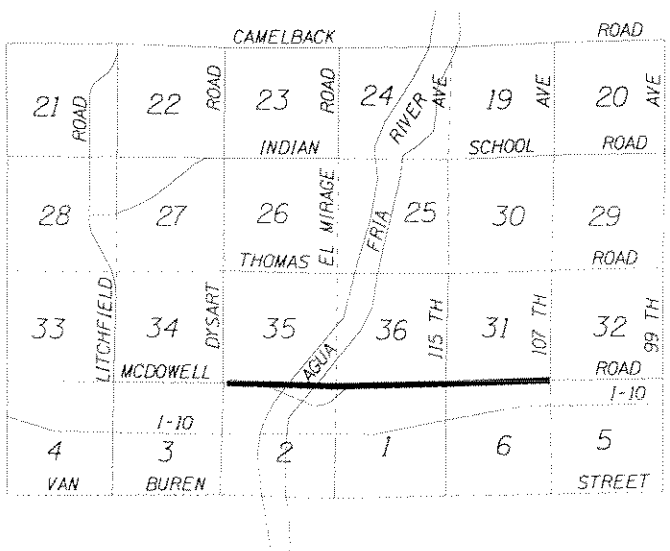

VICINITY MAP
N.T.S.

NOT TO SCALE

= AREA TO BE ANNEXED

= CITY OF AVONDALE

EXHIBIT B

SECTIONS 35 & 36
T. 2 N., R. 1 W.

SECTIONS 31 & 32
T. 2 N., R. 1 E.

SECTIONS 1 & 2
T. 1 N., R. 1 W.

SECTIONS 5 & 6
T. 1 N., R. 1 E.

4B

97046558?

CITY OF AVONDALE

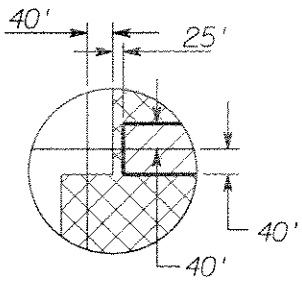

DETAIL "A"

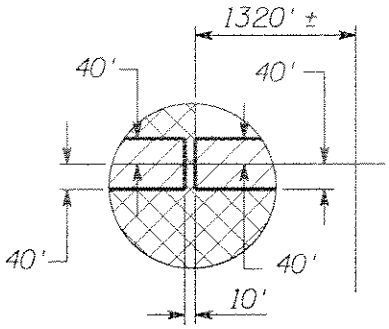

DETAIL "B"

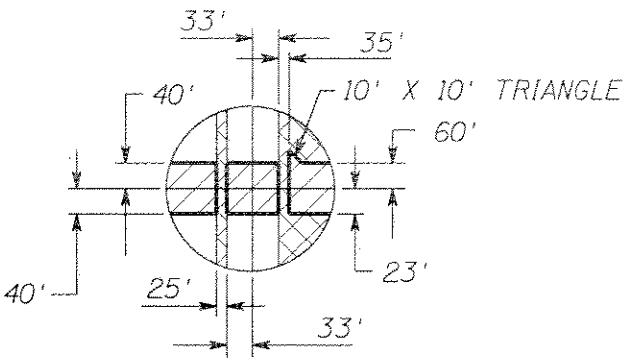

DETAIL "C"

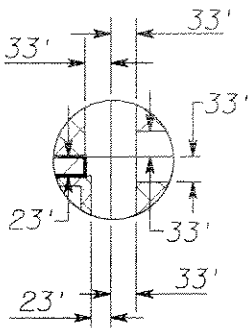

DETAIL "D"

NOT TO SCALE

= AREA TO BE ANNEXED

= CITY OF AVONDALE

EXHIBIT B

SECTIONS 35 & 36
T. 2 N., R. 1 W.

SECTIONS 31 & 32
T. 2 N., R. 1 E.

SECTIONS 1 & 2
T. 1 N., R. 1 W.

SECTIONS 5 & 6
T. 1 N., R. 1 E.

4C

127TH AVENUE

The West 10.00 feet of the Northwest Quarter of the Northeast Quarter of Section 2, Township 1 North, Range 1 West of the Gila and Salt River Base and Meridian, Maricopa County, Arizona

EXCEPT the North 40.00 feet thereof.

REGISTERED LAND SURVEYOR
CERTIFICATE NO.
33874
DANIEL G.
FRANCETIC
Date Signed 12-1-2006
ARIZONA U.S.A.

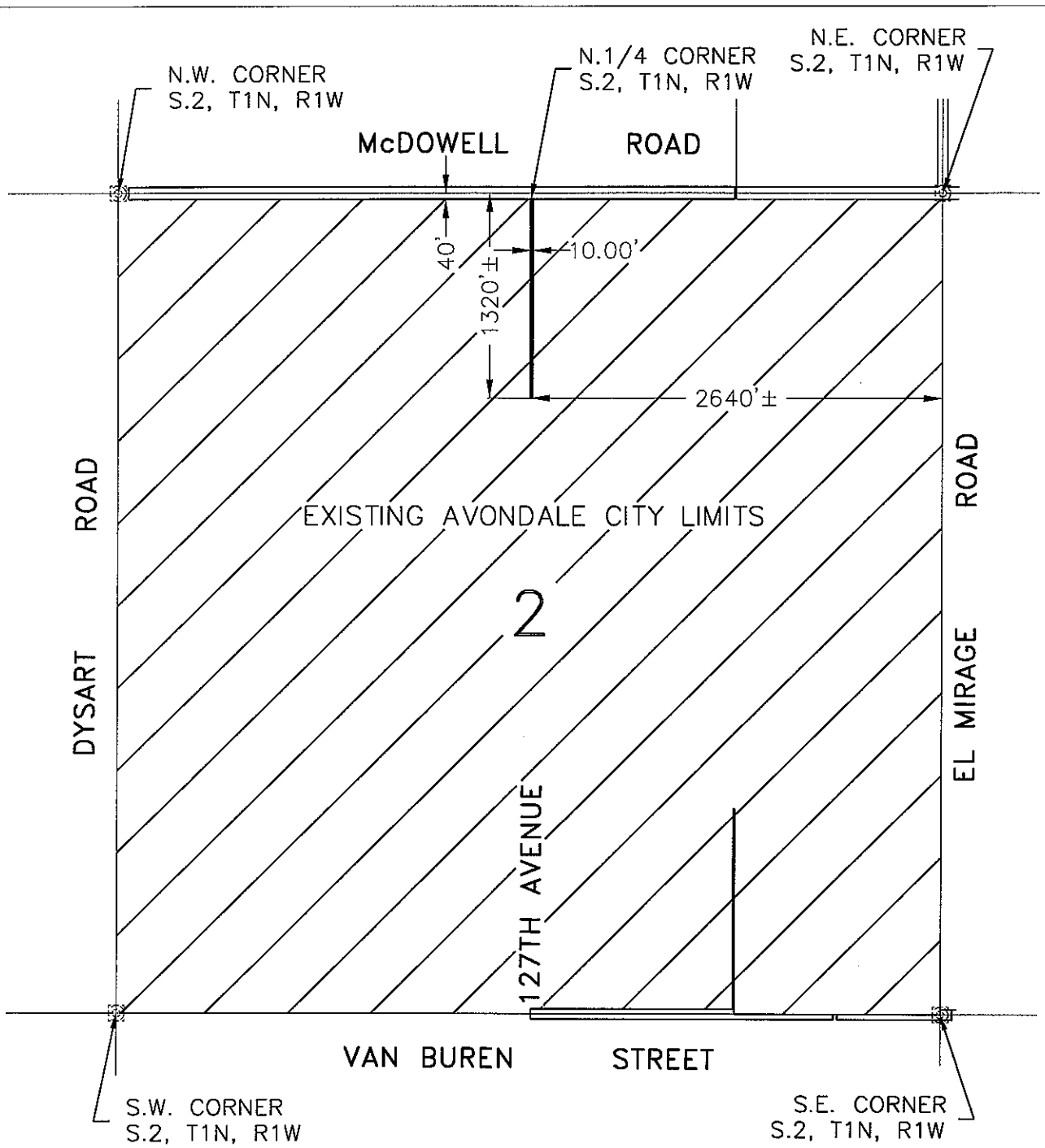

REGISTERED LAND SURVEYOR
CERTIFICATE NO.
33874
DANIEL G.
FRANCETIC
Date Signed 12-5-2006
ARIZONA U.S.A.

NORTH

1"=1000'

TO BE ANNEXED

EXISTING CITY LIMITS

S.2, T.1N., R.1W.

ANNEXATION PLAT

CITY OF AVONDALE, ARIZONA

WE HEREBY CERTIFY THAT THIS IS AN ACCURATE PLAT OF TERRITORY ANNEXED TO THE CITY OF AVONDALE, ARIZONA BY ORDINANCE NO.

MAYOR _____ DATE _____

CLERK _____ DATE _____

HUITT-ZOLLARS
Huitt-Zollars, Inc. Phoenix
426 North 44th Street, Suite 300
Phoenix, Arizona 85008-6596
Phone (602) 952-9123 Fax (602) 952-9124

H:\proj\0515407\dwg\Exhibits\0515407_127th Avenue Annexation Exhibit.dwg 12/5/2006 3:59:51 PM UMST

ENCANTO BOULEVARD

The North 33.00 feet of the Southeast quarter and the South 33.00 feet of the Northeast quarter of Section 36, Township 2 North, Range 1 West of the Gila and Salt River Base and Meridian. Maricopa County, Arizona:

EXCEPT: The West 70.00 feet and the East 58 feet.

REGISTERED LAND SURVEYOR
CERTIFICATE NO
13572
LARI D.
SPIRE
Date Signed 12-8-06
ARIZONA U.S.A.

97046558?

CITY OF AVONDALE

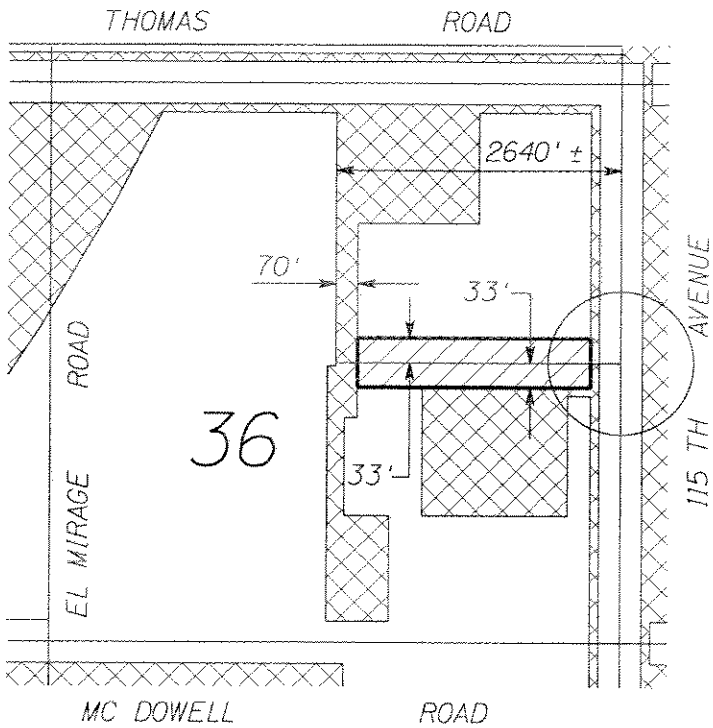

NOT TO SCALE

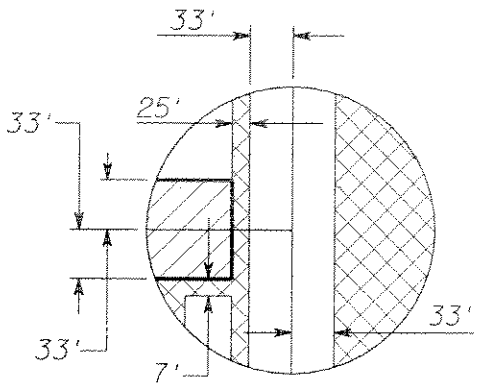

DETAIL "A"

= AREA TO BE ANNEXED

= CITY OF AVONDALE

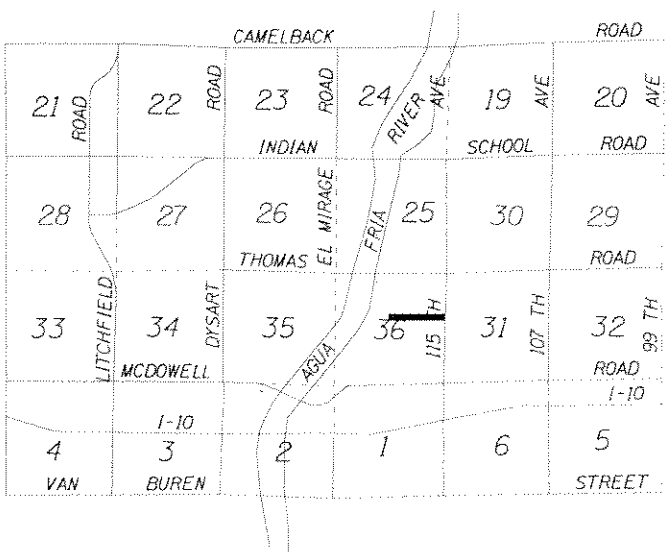

VICINITY MAP
N.T.S.

EXHIBIT B

SECTION 36
T. 2 N., R. 1 W.

6B

EL MIRAGE ROAD

That portion of Sections 35 and 36, Township 2 North, Range 1 West of the Gila and Salt River Base and Meridian, Maricopa County Arizona, more particularly described as follows:

Section 35

The East 33.00 feet of that portion of Section 35 lying South of the Northwesterly Right of Way line of the Agua Fria River Channel

EXCEPT: The South 40.00 feet.

Section 36

The West 33.00 feet of that portion of Section 36 lying South of the Northwesterly Right of Way line of the Agua Fria River Channel

EXCEPT: The South 40.00 feet.

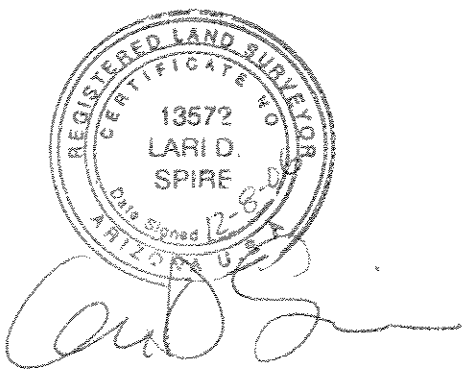

97046558?

CITY OF AVONDALE

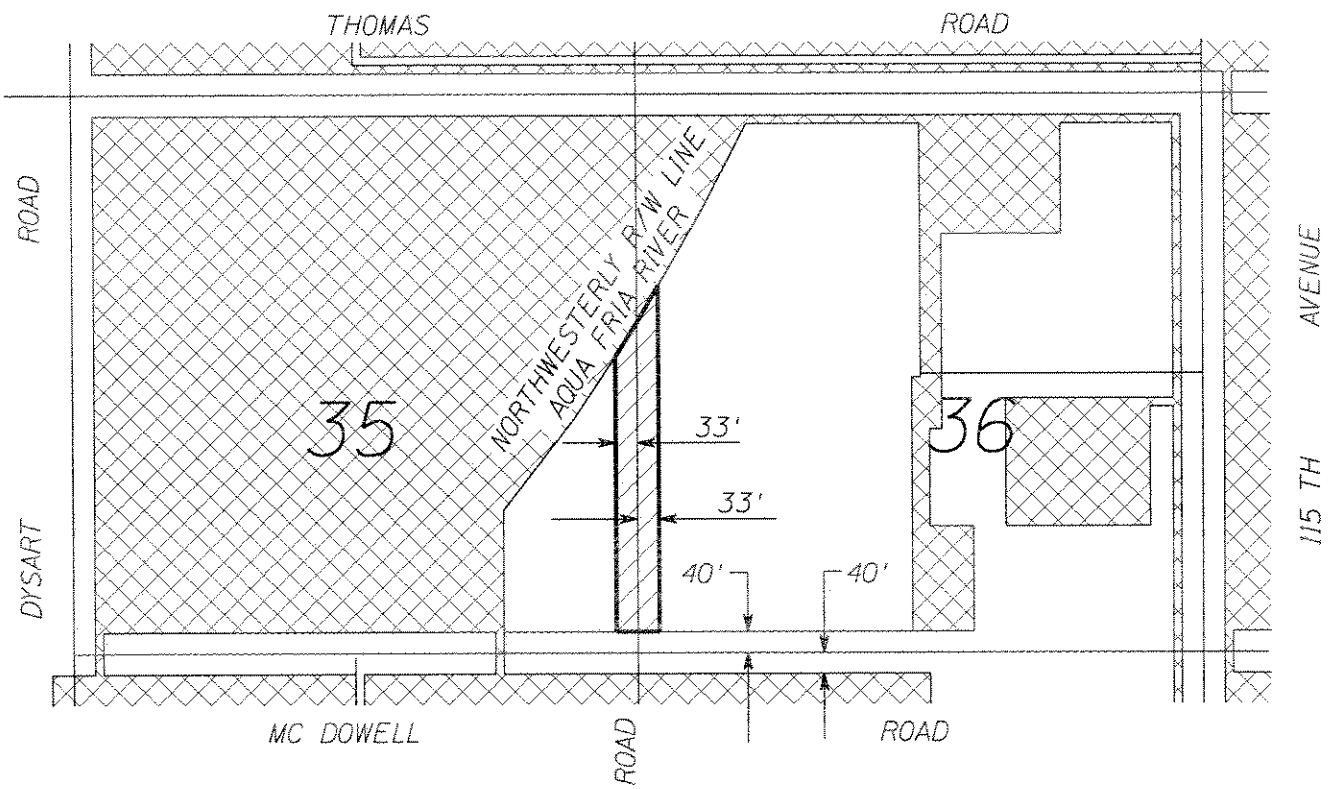

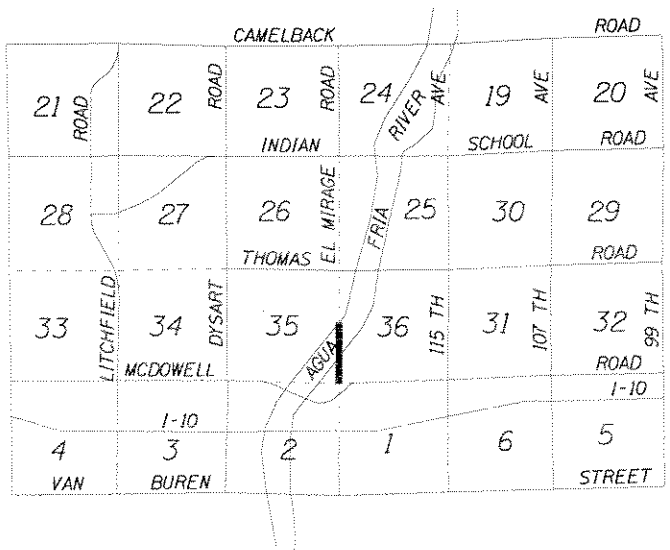

VICINITY MAP
N.T.S.

NOT TO SCALE

= AREA TO BE ANNEXED

= CITY OF AVONDALE

EXHIBIT B

SECTIONS 35 & 36
T. 2 N., R. 1 W.

REV. 2-18

7B

CITY COUNCIL REPORT

SUBJECT:
Ordinance 1223-1206 Rescinding Ordinance 926-03 and approving acquisition of Waterline Easement(s) from Flood Control District of Maricopa County

MEETING DATE:
December 18, 2006

TO: Mayor and Council

FROM: F.R. "Rob" Emmett, P.E., Utilities Director, (623) 478-3371

THROUGH: Charlie McClendon, City Manager

PURPOSE:

Staff is requesting that the City Council rescind Ordinance 926-03 and adopt an Ordinance to approve acquisition of Waterline Easement(s) from Flood Control District of Maricopa County and authorize the Mayor or City Manager and City Clerk to execute the necessary documents.

BACKGROUND:

The City Council approved acquisition of a waterline easement permitted by the Flood Control District for the Agua Fria Waterline; Ordinance 926-03. The pipeline was installed along the East bank of the Agua Fria river reaching from north of McDowell road to the water facility on the South Side of Van Buren. During construction the alignment needed to be modified due to utility conflicts at the Van Buren Road crossing. This resulted in changes to the size, reduction of the area and new descriptions of the required easements. This ordinance will allow the previous easements to be replaced by final easement documents and a refund of $3,077 to be received from the district for the reduced easement cost.

DISCUSSION:

There are three separate easement parcels with a combined total of 1.043 acres area. These easements are twenty foot wide strips which follow along the east levy of the Agua Fria River. They are generally located; from McDowell Road Right-of-Way extending 822 feet to the northeast, the 1347 feet between I-10 and Van Buren and 103 feet immediately south of Van Buren.

BUDGETARY IMPACT:

There is no budgetary impact associated with this action.

RECOMENDATION:

Staff recommends that the City Council rescind Ordinance 926-03 and adopt an Ordinance to approve acquisition of Waterline Easement(s) from Flood Control District of Maricopa County and authorize the Mayor or City Manager and City Clerk to execute the necessary documents.

ATTACHMENTS:

Click to download

- VICINITY MAP
- Ordinance 1223-1206 AF Waterline

VICINITY MAP

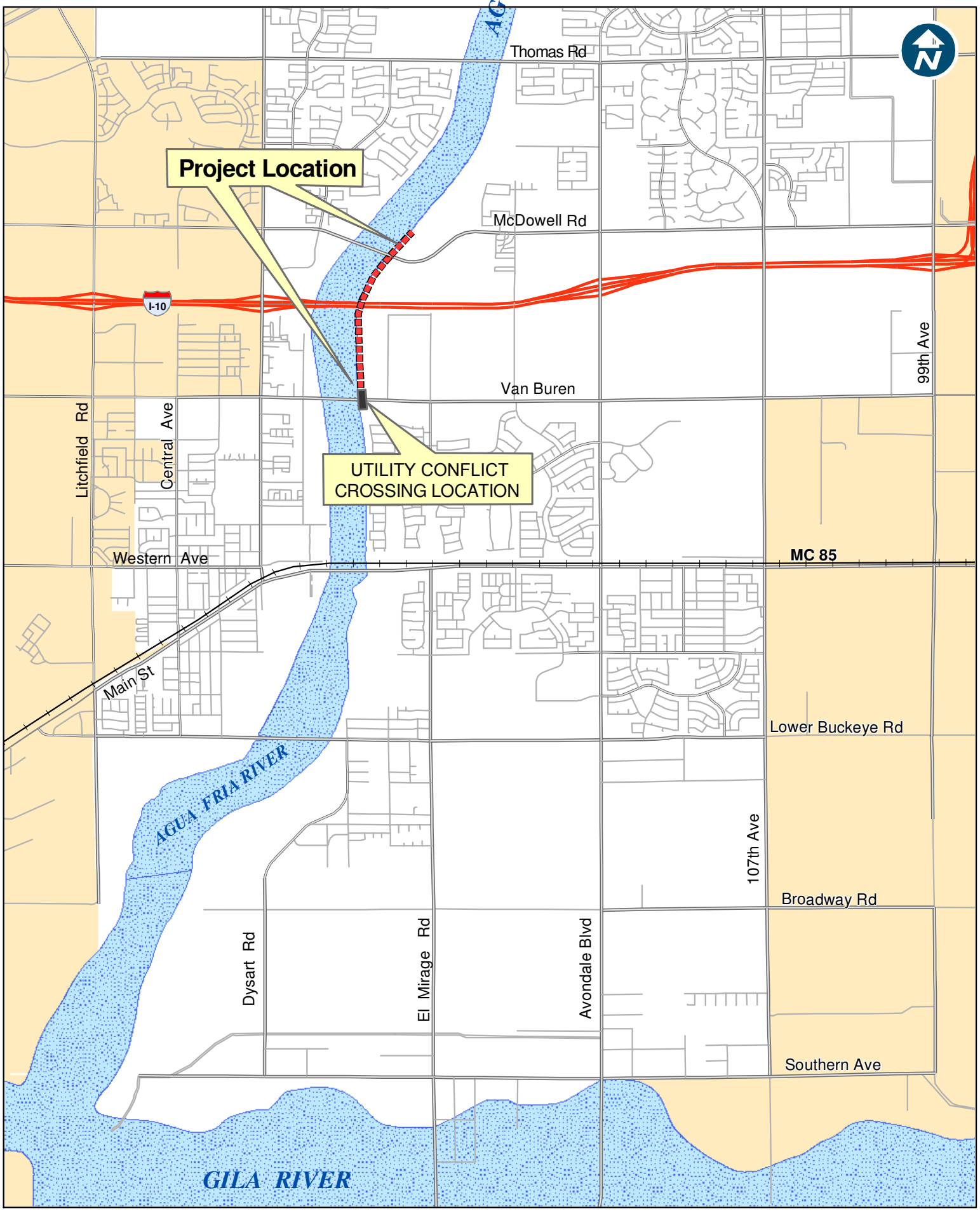

Agua Fria 20" Diameter
Transmission Pipeline

ORDINANCE NO. 1223-1206

AN ORDINANCE OF THE COUNCIL OF THE CITY OF AVONDALE, ARIZONA, REPEALING ORDINANCE 926-03 AND APPROVING THE ACQUISITION OF EASEMENTS FROM MARICOPA COUNTY FLOOD CONTROL DISTRICT.

WHEREAS, on April 21, 2003, the Council of the City of Avondale (the "City Council") passed and adopted Ordinance 926-03 approving the purchase of two waterline easements from the Maricopa County Flood Control District (the "Original Ordinance"); and

WHEREAS, the proposed acquisition area described and depicted in the Original Ordinance was modified and reduced to accommodate utility conflicts, resulting in the revision of the associated legal descriptions; and

WHEREAS, the City Council desires to approve the acquisition of the revised easements.

NOW, THEREFORE, BE IT ORDAINED BY THE COUNCIL OF THE CITY OF AVONDALE as follows:

SECTION 1. That Ordinance 926-03 is hereby repealed.

SECTION 2. That the purchase of easements over ± 1.048 acres of real property, generally located along the east bank of the Agua Fria River between McDowell Road and Van Buren Street, is hereby authorized from the Flood Control District of Maricopa County in the form attached hereto as Exhibit A and incorporated herein by reference.

SECTION 3. That the Mayor, the City Manager, the City Clerk and the City Attorney are hereby authorized and directed to execute all documents and take all steps necessary to carry out the purpose of this Ordinance.

[SIGNATURES ON FOLLOWING PAGE]

PASSED AND ADOPTED by the Council of the City of Avondale, December 18, 2006.

_____
Marie Lopez-Rogers, Mayor

ATTEST:

_____
Linda M. Farris, City Clerk

APPROVED AS TO FORM:

_____
Andrew J. McGuire, City Attorney

EXHIBIT A
TO
ORDINANCE NO. 1223-1206

[Easement]

See following pages.

When recorded, interoffice mail to
Flood Control District of
Maricopa County (dic)
2801 West Durango Street
Phoenix, Arizona 85009

FCD 1999 R016

WATERLINE EASEMENT

Project: Agua Fria River

District Parcel: A-12033 & 12033-3

Permit No. 2003P007

THE FLOOD CONTROL DISTRICT OF MARICOPA COUNTY, a municipal corporation and political subdivision of the State of Arizona, its agents, contractors, successors, and assigns, **GRANTOR,** for and in consideration of the sum of Twenty Thousand Nine Hundred Sixty Six Dollars and no cents **($20,966.00)** does hereby grant and convey solely unto **The City of Avondale, GRANTEE** (its successors and assigns), a non exclusive waterline easement for the sole purpose of constructing, operating, repairing and maintaining underground water lines and appurtenant facilities across, and under the surface of the premises hereinafter described:

See attached EXHIBIT "A and B"
Attached hereto and incorporated herein

The **GRANTEE** shall have the right of ingress and egress to and along said easement, together with the right to operate, repair, replace, and maintain appurtenant facilities from said premises; and to trim or remove any trees or shrubs that may interfere with the construction or endanger the said waterline.

GRANTEE agrees to indemnify **GRANTOR** for all direct damages to the real property, personal property, or physical injury to persons on the property of **GRANTOR**, as described in Exhibits "A and B" caused by or arising from the proximate result of the activities of **GRANTEE,** its officers, employees, agents or contractors in the exercise of **GRANTEE'S** rights pursuant to the terms of this Easement.

In the event the right, privilege and Easement herein granted shall be abandoned and permanently cease to be used for the purposes herein granted, all rights herein granted shall cease and revert to **GRANTOR**. Should this occur, Grantee will be solely responsible for removing all improvements previously allowed via this document, and for restoring this site to a condition acceptable to Grantor.

"GRANTEE"

CITY OF AVONDALE, an Arizona
municipal corporation

By:_____
Marie Lopez-Rogers, Mayor

ATTEST:

By:_____
Linda M. Farris, City CLerk

RECOMMENDED FOR APPROVAL:

FLOOD CONTROL DISTRICT OF MARICOPA COUNTY

_____

Timothy S. Phillips, P. E. Date
Acting Chief Engineer and General Manager

_____

Michael D. Wilson Date
Manager,
Land Management Division

ACCEPTED AND APPROVED:

BOARD OF DIRECTORS OF FLOOD CONTROL DISTRICT OF MARICOPA COUNTY

_____

Chairman of the Board

ATTEST:

_____

Clerk of the Board

Date: _____

EXHIBIT "A"

AGUA FRIA WATER TRANSMISSION MAIN

PUBLIC UTILITY EASEMENT

A parcel of land being a part of Section 2, Township 1 North, Range 1 West, Gila and Salt River Meridian, Maricopa County, Arizona, more particularly described as follows:

COMMENCING at the Northeast corner of said Section 2;

THENCE North 89°24'34" West along the North line of said Section 2 to the easterly right-of-way line of Flood Control District of Maricopa County, a distance of 568.40 feet;

THENCE South 40°41'00" West leaving the North line of said Section 2 along the southeasterly right-of-way line of Flood Control District of Maricopa County, to a point 40.00 feet South of said North line of Section 2, a distance of 52.29 feet to THE TRUE POINT OF BEGINNING;

THENCE continue South 40°41'00" West along the southeasterly right-of-way line of Flood Control District of Maricopa County, a distance of 822.28 feet to a point;

THENCE North 89°18'39" West a distance of 26.11 feet;

THENCE North 40°41'00" East parallel to and 20.00 feet northwesterly of the southeasterly right-of-way line of Flood Control District of Maricopa County, to a point 40.00 feet South of the North line of said Section 2, a distance of 822.22 feet;

THENCE South 89°24'34" East parallel to and 40.00 feet South of the North line of said Section 2, a distance of 26.14 feet to THE TRUE POINT OF BEGINNING.

Containing a computed area of 16,445 square feet or 0.3775 acres, more or less.

REGISTERED LAND SURVEYOR
CERTIFICATE NO.
7140
MYRON G.
JASMANN
Date Signed 1/09/03
ARIZONA, U.S.A.

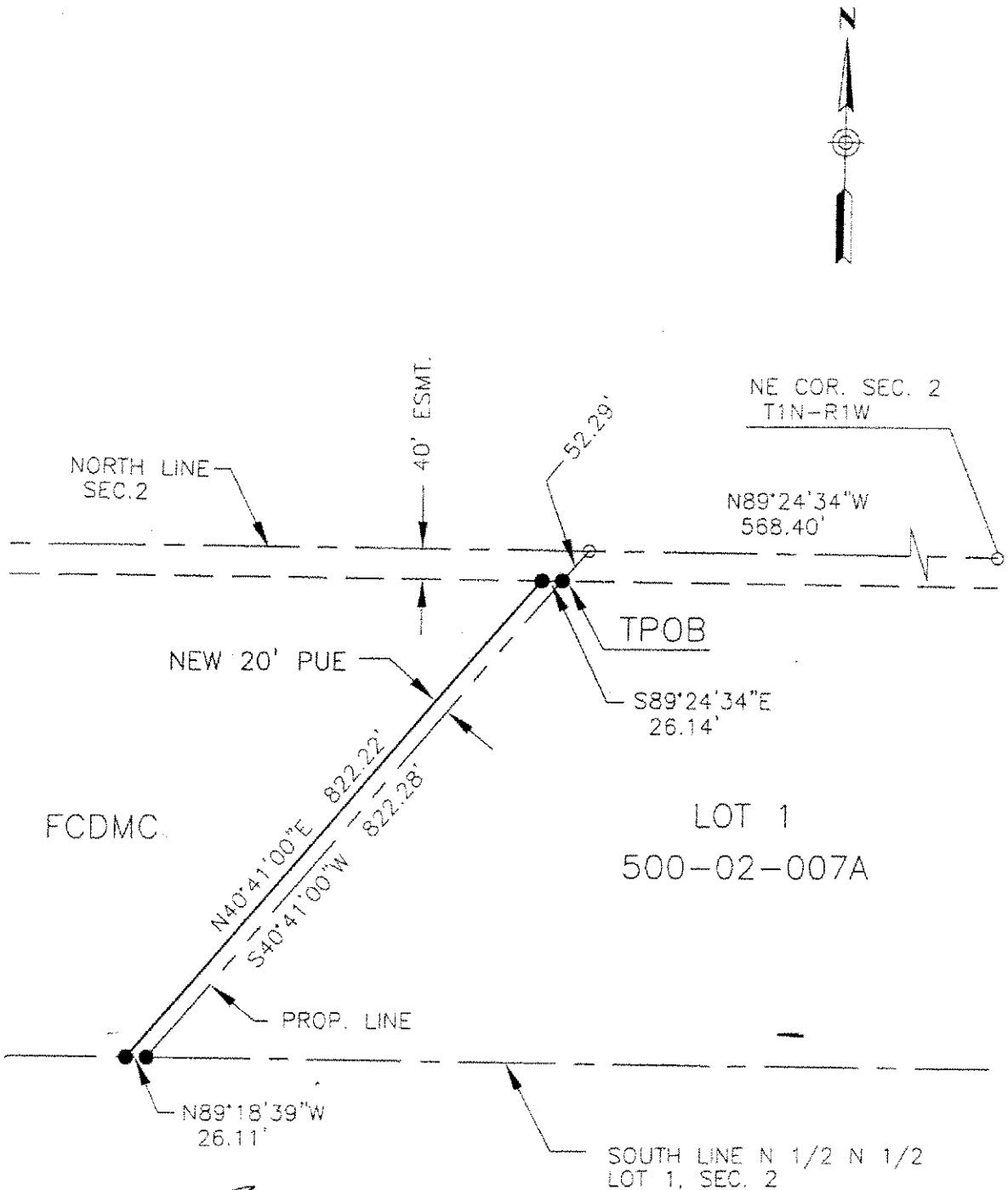

REGISTERED LAND SURVEYOR
CERTIFICATE NO.
7140
MYRON G.
JASMANN
Date Signed 1/09/03
ARIZONA, U.S.A.

PUBLIC UTILITY EASEMENT

EXHIBIT B

1-8-03

DIBBLE & ASSOCIATES
CONSULTING ENGINEERS
Since 1962
2632 E. Indian School Rd., Ste 401
Phoenix, Arizona 85016-6763

EXHIBIT "A"

AGUA FRIA WATER TRANSMISSION MAIN

WATER EASEMENT

A Water Easement (WE) 20.00 feet in width being a portion the East Half (E ½) of Section 2, Township 1 North, Range 1 West, Gila and Salt River Meridian, Maricopa County, Arizona, more particularly described as follows:

COMMENCING at the Southeast corner of said Section 2;

THENCE North 88°22'14" West along the South line of said Section 2, a distance of 2,210.21 feet to a point;

THENCE North 04°32'18" West leaving the South line of said Section 2 to a point on the North right-of-way line of Van Buren Street, a distance of 33.19 feet to THE POINT OF BEGINNING;

THENCE continue North 04°32'18" West a distance of 787.01 feet to a point;

THENCE North 00°39'18" East a distance of 559.81 feet to a point;

THENCE South 88°22'14" East to a point on the West line of a parcel of land as described in Document 99-1145300, Maricopa County Records, Maricopa County, Arizona, a distance of 20.00 feet;

THENCE South 00°39'18" West along the West line of said Document 99-1145300, a distance of 558.57 feet to a point;

THENCE South 04°32'18" East along the West line of said Document 99-1145300 and its prolongation to a point 33.00 feet North of the South line of said Section 2 on the North right-of-way line of Van Buren Street, a distance of 788.26 feet;

THENCE North 88°22'14" West parallel to and 33.00 feet North of the South line of said Section 2 and along said North right-of-way line, a distance of 20.12 feet to THE POINT OF BEGINNING.

Containing a computed area of 26,937 square feet or 0.6184 acres, more or less.

REGISTERED LAND SURVEYOR
CERTIFICATE NO.
7140
MYRON G.
JASMANN
Date Signed 12-23-03
ARIZONA, U.S.A.

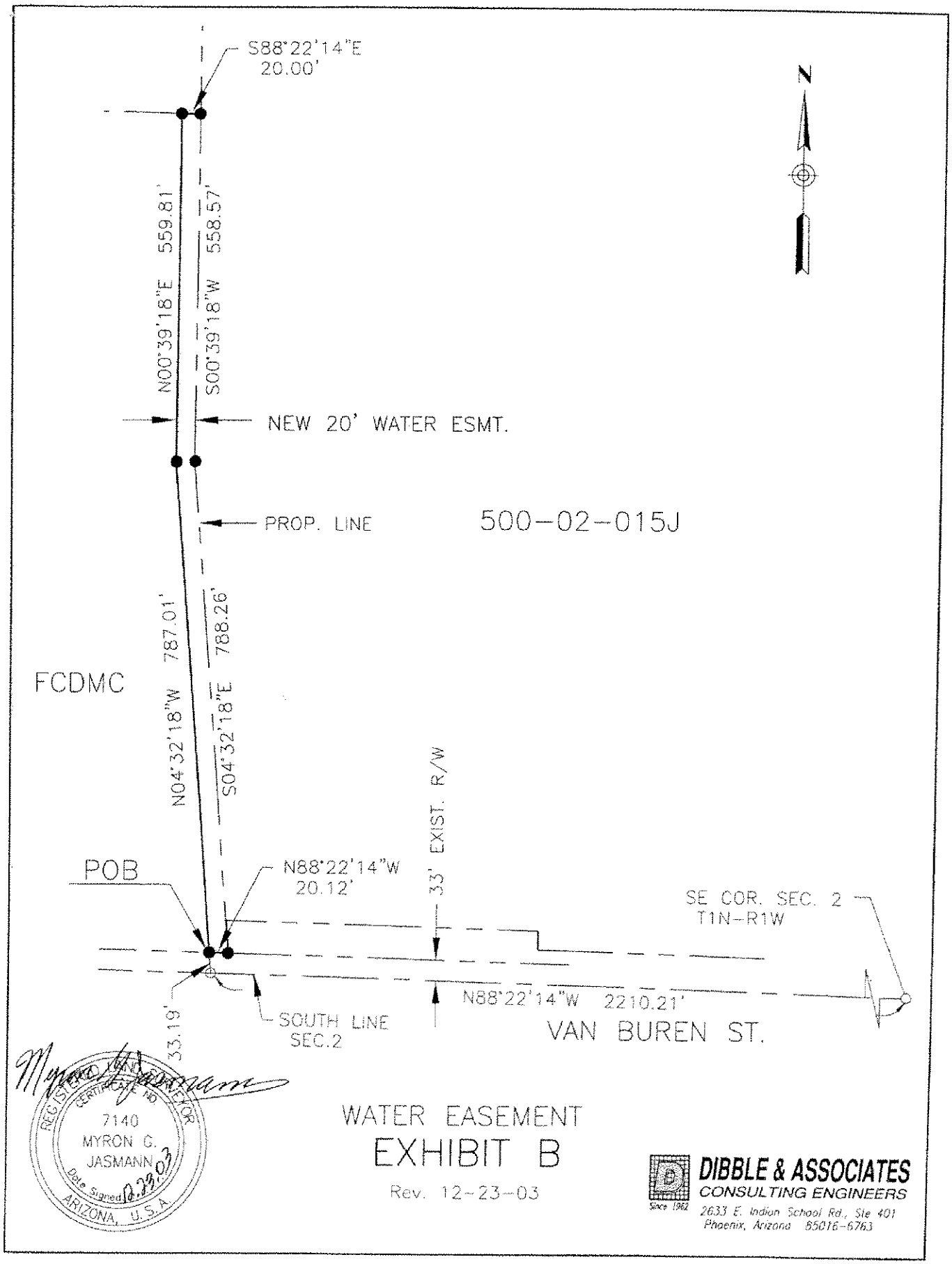
S88°22'14"E
20.00'
N
N00°39'18"E 559.81'
S00°39'18"W 558.57'
NEW 20' WATER ESMT.
PROP. LINE
500-02-015J
N04°32'18"W 787.01'
S04°32'18"E 788.26'
FCDMC
33' EXIST. R/W
POB
N88°22'14"W
20.12'
SE COR. SEC. 2
T1N-R1W
N88°22'14"W 2210.21'
33.19'
SOUTH LINE
SEC.2
VAN BUREN ST.
REGISTERED LAND SURVEYOR
CERTIFICATE NO.
7140
MYRON G.
JASMANN
Date Signed 12-23-03
ARIZONA, U.S.A.
WATER EASEMENT
EXHIBIT B
Rev. 12-23-03
DIBBLE & ASSOCIATES
CONSULTING ENGINEERS
Since 1962
2633 E. Indian School Rd., Ste 401
Phoenix, Arizona 85016-6763

EXHIBIT "A"

AGUA FRIA WATER TRANSMISSION MAIN

WATER EASEMENT

A Water Easement (WE) 20.00 feet in width being a portion the East Half (E ½) of Section 11, Township 1 North, Range 1 West, Gila and Salt River Meridian, Maricopa County, Arizona, more particularly described as follows:

COMMENCING at the Northeast corner of said Section 11;

THENCE North 88°22'14" West along the North line of said Section 11, a distance of 2,210.21 feet to a point;

THENCE South 04°32'18" East departing the North line of said Section 11 to a point on the South right-of-way line of Van Buren Street, a distance of 33.19 feet to THE POINT OF BEGINNING;

THENCE South 88°22'14" East parallel to and 33.00 South of the North line of said Section 11 along said right-of-way line, a distance of 20.12 feet to a point;

THENCE South 04°32'18" East departing said right-of-way line to a point 70.00 feet South of the North line of said Section 11, a distance of 37.22 feet;

THENCE South 88°22'14" East parallel to and 70.00 feet South of the North line of said Section 11 to a point on the Westerly line of a parcel of land as shown on a Record of Survey as recorded in Book 384 of Maps, Page 15, Maricopa County Records, Maricopa County, Arizona, a distance of 45.16 feet;

THENCE South 09°00'12" East along the westerly line of said Record of Survey to a point 90.00 feet South of the North line of said Section 11, a distance of 20.35 feet;

THENCE North 88°22'14" West departing said westerly line parallel to and 90.00 feet South of the North line of said Section 11, a distance of 66.87 feet to a point;

THENCE North 04°32'18" West a distance of 57.33 feet to THE POINT OF BEGINNING.

Containing a computed area of 2,066 square feet or 0.0474 acres, more or less.

REGISTERED LAND SURVEYOR
CERTIFICATE NO.
7140
MYRON G.
JASMANN
Date Signed 12.23.03
ARIZONA, U.S.A.

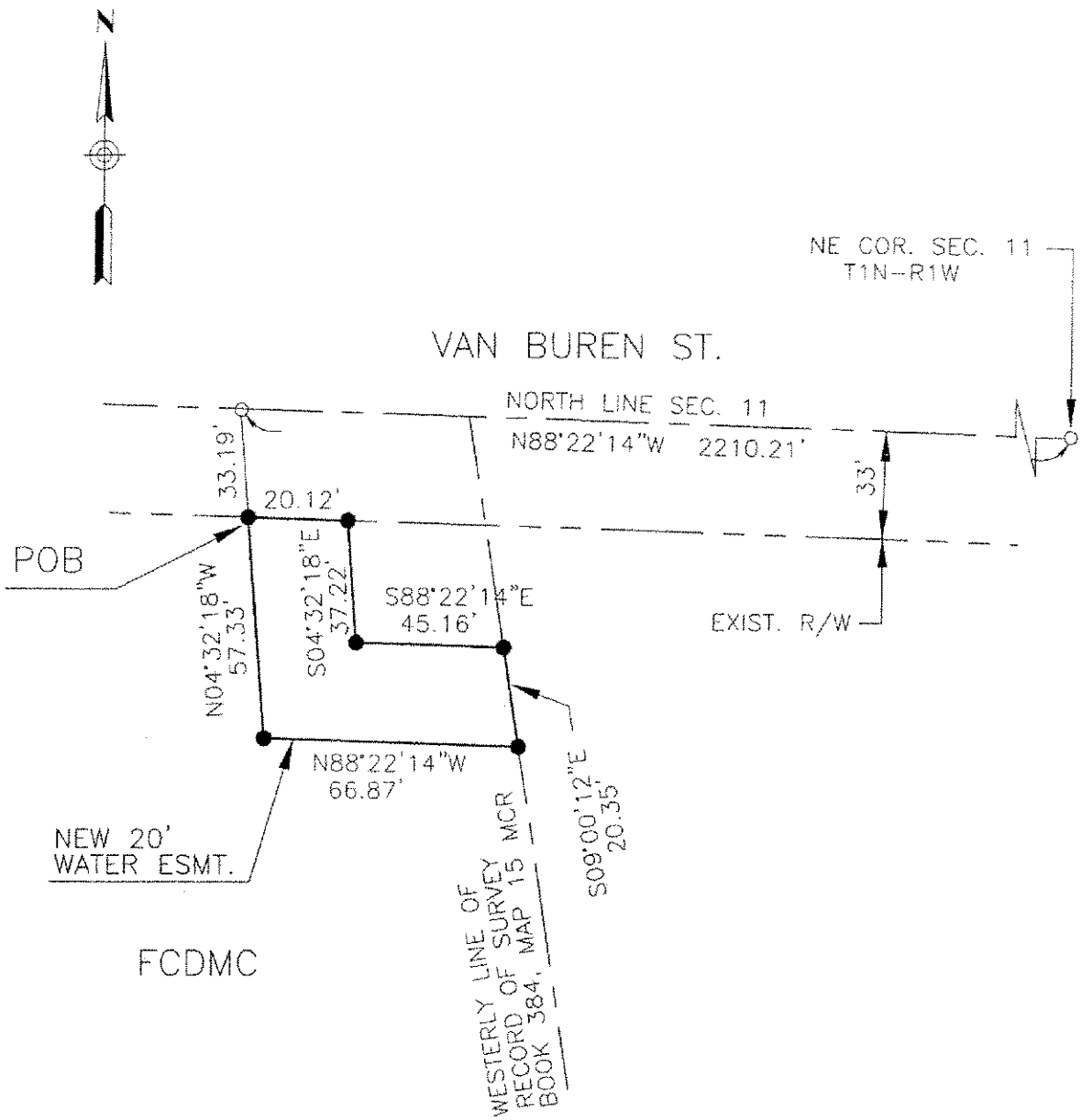

REGISTERED LAND SURVEYOR
CERTIFICATE NO.
7140
MYRON G.
JASMANN
Date Signed 12-22-03
ARIZONA, U.S.A.

WATER EASEMENT

EXHIBIT B

Rev. 12-23-03

DIBBLE & ASSOCIATES
CONSULTING ENGINEERS
Since 1962
2633 E. Indian School Rd., Ste 401
Phoenix, Arizona 85016-6763

CITY COUNCIL REPORT

SUBJECT:
Ordinances 1226-1206, 1227-1206, 1228-1206, 1229-1206, 1230-1206, 1231-1206, 1232-1206, 1233-1206, 1234-1206, 1235-1206 authorizing an increase in the City's development fees.

MEETING DATE:
December 18, 2006

TO: Mayor and Council

FROM: Kevin Artz, Finance & Budget Director

THROUGH: Charlie McClendon, City Manager

PURPOSE:

To adopt separate ordinances amending the City Code, relating to Development Fees, providing for a new fee amount and effective date.

BACKGROUND:

Arizona Revised Statute 9-463.05 provides that "a City may assess fees to offset costs to the City associated with providing necessary public services to a development." The Avondale City Code also provides for the collection of development fees at the point of building permit issuance.

On January 17, 2006, Council awarded a contract to TischlerBise, Fiscal, Economic and Planning Consultants for services pertaining to the evaluation and development of the City's development fees. The consultant has conducted a development fee study, reviewed the existing capital improvement plan and infrastructure needs and prepared a development fee proposal. The draft report was provided to staff on August 24, 2006. Staff believes the report includes all appropriate costs and methodologies to fairly and equitably allocate the cost of infrastructure and equipment needs necessary for new development.

On August 28, 2006, the draft report was sent to members of the development community including the Home Builders' Association of Central Arizona (HBACA), Valley Partnership and Capitol Consulting (Multi-Family Housing). Input was solicited and members from each of the foregoing groups invited to a stake holder meeting scheduled for September 8, 2006.

On September 8, 2006 staff held a briefing on the proposed fees and summarized the methodologies and calculation of the proposed fees.

On September 18, 2006, Staff presented the draft development fee report to Council for review and discussion. Council directed staff to move forward with the public notice process.

On September 25, 2006, City staff was presented with an evaluation of the draft development fee report prepared by the Home Builders' Association of Central Arizona (HBACA). Questions were raised in the evaluation regarding the inclusion of projects, costs and level of service. The questions were forwarded to TischlerBise for their review. Staff prepared a response on October 12, 2006 addressing the questions and included the responses prepared by TischlerBise. A reduction in the Transportation Development fee was recommended based on the HBACA's evaluation.

On October 2, 2006, Council adopted a resolution authorizing the declaration of a notice of intention to increase development fees. This notice was published in the West Valley View on October 31, 2006 stating the

date and time of the public hearing as required by Arizona Revised Statute 9-463.05.

On December 4, 2006 staff met with members of the HBACA to discuss the fee study since no further questions had been provided to staff after issuance of the staff letter dated October 12, 2006. The remaining issue at the conclusion of the meeting included the park land costs included in the study. Staff has since determined that the HBACA is no longer questioning the park land cost included in the study.

On December 4, 2006 the Council conducted a public hearing on the proposed increase in development fees. Requests made and issues referenced during public hearing included:

- A delay in the vote on the proposed fees
- Proposed fees are high
- More meetings to discuss home builder issues
- Cost of wastewater treatment plant expansion
- The possible implementation of an increased construction sales tax rate
- A "phase-in" of proposed fees

Mayor and Council provided direction to proceed with the process. Additional meetings have been scheduled with stakeholders to further discuss issues.

Based on the cashflow section of the TischlerBise report and staff evaluation, a delay in the vote or "phase-in" of the fees will result in larger deficits in funding for growth projects. While the proposed fees seem high, they reflect the cost per dwelling unit or commercial square footage to provide the equipment and infrastructure necessary to service new development.

DISCUSSION:

The City has complied with all of the requirements of Arizona Revised Statute (Section 9-463.05). The City has given the required sixty-day notice of intent to increase the development fee, the written report has been released to the public, and a public hearing on the proposed fee increase has been held. The Ordinances become effective ninety days after formal adoption by the Council.

The proposed fees are compared with existing fees in the following table.

Residential	Current	Proposed
Single Family 3/4" meter		
Fire	489	996
General Government	585	929
Library	264	346
Parks	791	2,501
Police	187	344
Sanitation / Public Works	267	304
Transportation	873	1,857
Water	3,289	5,251
Wastewater	3,254	5,493
Total	9,999	18,021

BUDGETARY IMPACT:

The increased fees have been included in the estimated revenues in the City's capital improvement plan.

RECOMENDATION:

Staff recommends that Council adopt ordinances implementing 100% of the proposed development fees effective within ninety days.

ATTACHMENTS:

Click to download

- Ordinances
- text amendment ordinance

ORDINANCE NO. 1227-1206

AN ORDINANCE OF THE COUNCIL OF THE CITY OF AVONDALE, ARIZONA, AMENDING THE AVONDALE CITY CODE, CHAPTER 26, DEVELOPMENT FEES, ARTICLE II, DEVELOPMENT FEES BY PUBLIC FACILITY CATEGORY, RELATING TO CITYWIDE DEVELOPMENT FEES FOR WATER FACILITIES.

WHEREAS, pursuant to ARIZ. REV. STAT. § 9-463.05, the City of Avondale (the "City") is authorized to impose reasonable development fees to offset costs to the City associated with providing necessary public services; and

WHEREAS, water, sewer, library, parks and recreation, police, fire and emergency medical service ("EMS"), general government, sanitation, and transportation facilities are necessary public services; and

WHEREAS, the City must provide and fund capital public facilities required to provide such necessary public services; and

WHEREAS, the City retained TischlerBise, Inc. to analyze and assess growth and development projections to determine the additional demand created by new development for water, sewer, library, parks and recreation, police, fire and EMS, general government, sanitation, and transportation facilities anticipated to be placed on the City; and

WHEREAS, TischlerBise reviewed the existing demand for water, sewer, library, parks and recreation, police, fire and EMS, general government, sanitation, and transportation facilities, the existing facilities available to meet that demand, and the method of financing the existing systems; and

WHEREAS, TischlerBise additionally reviewed the contribution made or to be made in the future in cash or by taxes, fees, or assessments by property owners towards the capital costs of water, sewer, library, parks and recreation, police, fire and EMS, general government, sanitation, and transportation facilities; and

WHEREAS, TischlerBise reviewed and relied upon the current City level of service ("LOS") standards facility cost assumptions; and

WHEREAS, the population and residential development projections for the City indicate (i) that peak population will increase from approximately 75,834 persons in 2007 to 129,189

persons in the year 2027 and (ii) that peak housing units will increase from approximately 22,565 in 2007 to 38,475 in the year 2027; and

WHEREAS, TischlerBise has prepared the "Development Study Prepared for the City of Avondale," dated August 24, 2006, as may be further updated from time to time (the "Technical Report"), including the assumptions, population and residential and non-residential development projections, capital improvements and development fee calculations, which Technical Report has been submitted to and reviewed by City staff and officials; and

WHEREAS, the Technical Report has been presented to and reviewed by the City Council, which has determined (i) that development fees are necessary to offset the costs to the City associated with meeting the necessary public service and facility demand created by projected new residential and non-residential development, (ii) that the amount of the development fees bears a reasonable relationship to the burden imposed upon the City to provide new public facilities, (iii) that the expenditure of development fees, pursuant to the terms of this Ordinance, will result in a beneficial use to such new development reasonably related to the development fees, per dwelling unit, by type and per increment of non-residential development, (iv) that an "essential nexus" exists between the projected new residential development and the need for additional public facilities to be funded via the development fees and (v) that the amount of the development fees is roughly proportional to the fair share of the additional public facilities needed to provide adequate service to new development, while maintaining the existing LOS standard currently provided to City residents; and

WHEREAS, based on the findings and recommendations set forth in the Technical Report, the beneficial use of public improvements to be constructed with development fees is citywide; and

WHEREAS, the City has prepared, or is preparing, a capital improvement program that includes public facility improvements to ensure that new development paying development fees receive a beneficial use from public facilities constructed through the expenditure of development fees; and

WHEREAS, development fee funds shall be placed in separate interest-bearing funds and accounted for separately; and

WHEREAS, interest earned on development fee funds shall be credited to the development fee account to which it accrues; and

WHEREAS, expenditure of development fee funds is limited to those allowed by applicable state law; and

WHEREAS, a credit shall be provided toward the payment of development fees for required dedications of public sites and improvements; and

WHEREAS, Chapter 26 of the City Code sets forth a schedule for payment of development fees; and

WHEREAS, the policies related to the City's Commercial Infill Incentive Plan, as set forth in Chapter 19, Article IV, of the City Code, are in the public interest and are necessary to protect the public health, safety, and welfare of the citizens of the City; and

WHEREAS, the limited exemption for eligible infill developments, as provided by the City Code, will protect and advance such policies; and

WHEREAS, development fees will be assessed in a non-discriminatory manner; and

WHEREAS, an annual report consistent with state law shall be prepared and filed; and

WHEREAS, pursuant to ARIZ. REV. STAT. § 9-463.05, the City padopted a Notice of Intent to Assess a Development Fee on October 2, 2006 and a public hearing on the Development Fee was held on December 18, 2006.

NOW THEREFORE, BE IT ORDAINED BY THE COUNCIL OF THE CITY OF AVONDALE as follows:

SECTION 1. That the fee schedule located in Avondale City Code, Chapter 26, Development Fees, Article II, Development Fees by Public Facility Category, Section 26-20, Water facilities development fee, is hereby deleted in its entirety and replaced with the following:

Meter Size (inches)	Type	Capacity Ratio	Development Fee Amount
0.75	Displacement	1.00	$5,251
1.00	Displacement	1.70	$8,833
1.50	Displacement	3.30	$16,985
2.00	Displacement	5.30	$27,067
3.00	Compound	11.00	$56,248
4.00	Compound	17.00	$86,800

SECTION 2. That the Mayor, the City Manager, the City Clerk and the City Attorney are hereby authorized and directed to execute all documents and take all steps necessary to carry out the purpose and intent of this Ordinance.

SECTION 3. If any provision of this Ordinance is for any reason held by any court of competent jurisdiction to be unenforceable, such provision or portion hereof shall be deemed separate, distinct and independent of all other provisions and such holding shall not affect the validity of the remaining portions of this Ordinance.

SECTION 4. The provisions of this Ordinance shall take effect 90 days after the date of passage and adoption.

PASSED AND ADOPTED by the Council of the City of Avondale, December 18, 2006.

_____
Marie Lopez-Rogers, Mayor

ATTEST:

_____
Linda M. Farris, City Clerk

APPROVED AS TO FORM:

_____
Andrew J. McGuire, City Attorney

ORDINANCE NO. 1228-1206

AN ORDINANCE OF THE COUNCIL OF THE CITY OF AVONDALE, ARIZONA, AMENDING THE AVONDALE CITY CODE, CHAPTER 26, DEVELOPMENT FEES, ARTICLE II, DEVELOPMENT FEES BY PUBLIC FACILITY CATEGORY, RELATING TO CITYWIDE DEVELOPMENT FEES FOR SEWER FACILITIES.

WHEREAS, pursuant to ARIZ. REV. STAT. § 9-463.05, the City of Avondale (the "City") is authorized to impose reasonable development fees to offset costs to the City associated with providing necessary public services; and

WHEREAS, water, sewer, library, parks and recreation, police, fire and emergency medical service ("EMS"), general government, sanitation, and transportation facilities are necessary public services; and

WHEREAS, the City must provide and fund capital public facilities required to provide such necessary public services; and

WHEREAS, the City retained TischlerBise, Inc. to analyze and assess growth and development projections to determine the additional demand created by new development for water, sewer, library, parks and recreation, police, fire and EMS, general government, sanitation, and transportation facilities anticipated to be placed on the City; and

WHEREAS, TischlerBise reviewed the existing demand for water, sewer, library, parks and recreation, police, fire and EMS, general government, sanitation, and transportation facilities, the existing facilities available to meet that demand, and the method of financing the existing systems; and

WHEREAS, TischlerBise additionally reviewed the contribution made or to be made in the future in cash or by taxes, fees, or assessments by property owners towards the capital costs of water, sewer, library, parks and recreation, police, fire and EMS, general government, sanitation, and transportation facilities; and

WHEREAS, TischlerBise reviewed and relied upon the current City level of service ("LOS") standards facility cost assumptions; and

WHEREAS, the population and residential development projections for the City indicate (i) that peak population will increase from approximately 75,834 persons in 2007 to 129,189

persons in the year 2027 and (ii) that peak housing units will increase from approximately 22,565 in 2007 to 38,475 in the year 2027; and

WHEREAS, TischlerBise has prepared the "Development Study Prepared for the City of Avondale," dated August 24, 2006, as may be further updated from time to time (the "Technical Report"), including the assumptions, population and residential and non-residential development projections, capital improvements and development fee calculations, which Technical Report has been submitted to and reviewed by City staff and officials; and

WHEREAS, the Technical Report has been presented to and reviewed by the City Council, which has determined (i) that development fees are necessary to offset the costs to the City associated with meeting the necessary public service and facility demand created by projected new residential and non-residential development, (ii) that the amount of the development fees bears a reasonable relationship to the burden imposed upon the City to provide new public facilities, (iii) that the expenditure of development fees, pursuant to the terms of this Ordinance, will result in a beneficial use to such new development reasonably related to the development fees, per dwelling unit, by type and per increment of non-residential development, (iv) that an "essential nexus" exists between the projected new residential development and the need for additional public facilities to be funded via the development fees and (v) that the amount of the development fees is roughly proportional to the fair share of the additional public facilities needed to provide adequate service to new development, while maintaining the existing LOS standard currently provided to City residents; and

WHEREAS, based on the findings and recommendations set forth in the Technical Report, the beneficial use of public improvements to be constructed with development fees is citywide; and

WHEREAS, the City has prepared, or is preparing, a capital improvement program that includes public facility improvements to ensure that new development paying development fees receive a beneficial use from public facilities constructed through the expenditure of development fees; and

WHEREAS, development fee funds shall be placed in separate interest-bearing funds and accounted for separately; and

WHEREAS, interest earned on development fee funds shall be credited to the development fee account to which it accrues; and

WHEREAS, expenditure of development fee funds is limited to those allowed by applicable state law; and

WHEREAS, a credit shall be provided toward the payment of development fees for required dedications of public sites and improvements; and

WHEREAS, Chapter 26 of the City Code sets forth a schedule for payment of development fees; and

WHEREAS, the policies related to the City's Commercial Infill Incentive Plan, as set forth in Chapter 19, Article IV, of the City Code, are in the public interest and are necessary to protect the public health, safety, and welfare of the citizens of the City; and

WHEREAS, the limited exemption for eligible infill developments, as provided by the City Code, will protect and advance such policies; and

WHEREAS, development fees will be assessed in a non-discriminatory manner; and

WHEREAS, an annual report consistent with state law shall be prepared and filed; and

WHEREAS, pursuant to ARIZ. REV. STAT. § 9-463.05, the City adopted a Notice of Intent to Assess a Development Fee on October 2, 2006 and a public hearing on the Development Fee was held on December 18, 2006.

NOW THEREFORE, BE IT ORDAINED BY THE COUNCIL OF THE CITY OF AVONDALE as follows:

SECTION 1. That the fee schedule located in Avondale City Code, Chapter 26, Development Fees, Article II, Development Fees by Public Facility Category, Section 26-21, Sewer facilities development fee, is hereby deleted in its entirety and replaced with the following:

Meter Size (inches)	Type	Capacity Ratio	Development Fee Amount
0.75	Displacement	1.00	$5,493
1.00	Displacement	1.70	$9,270
1.50	Displacement	3.30	$17,908
2.00	Displacement	5.30	$28,575
3.00	Compound	11.00	$59,450
4.00	Compound	17.00	$91,774

SECTION 2. That the Mayor, the City Manager, the City Clerk and the City Attorney are hereby authorized and directed to execute all documents and take all steps necessary to carry out the purpose and intent of this Ordinance.

SECTION 3. If any provision of this Ordinance is for any reason held by any court of competent jurisdiction to be unenforceable, such provision or portion hereof shall be deemed separate, distinct and independent of all other provisions and such holding shall not affect the validity of the remaining portions of this Ordinance.

SECTION 4. The provisions of this Ordinance shall take effect 90 days after the date of passage and adoption.

PASSED AND ADOPTED by the Council of the City of Avondale, December 18, 2006.

_____
Marie Lopez-Rogers, Mayor

ATTEST:

_____
Linda M. Farris, City Clerk

APPROVED AS TO FORM:

_____
Andrew J. McGuire, City Attorney

ORDINANCE NO. 1229-1206

AN ORDINANCE OF THE COUNCIL OF THE CITY OF AVONDALE, ARIZONA, AMENDING THE AVONDALE CITY CODE, CHAPTER 26, DEVELOPMENT FEES, ARTICLE II, DEVELOPMENT FEES BY PUBLIC FACILITY CATEGORY, RELATING TO CITYWIDE DEVELOPMENT FEES FOR LIBRARY FACILITIES.

WHEREAS, pursuant to ARIZ. REV. STAT. § 9-463.05, the City of Avondale (the "City") is authorized to impose reasonable development fees to offset costs to the City associated with providing necessary public services; and

WHEREAS, water, sewer, library, parks and recreation, police, fire and emergency medical service ("EMS"), general government, sanitation, and transportation facilities are necessary public services; and

WHEREAS, the City must provide and fund capital public facilities required to provide such necessary public services; and

WHEREAS, the City retained TischlerBise, Inc. to analyze and assess growth and development projections to determine the additional demand created by new development for water, sewer, library, parks and recreation, police, fire and EMS, general government, sanitation, and transportation facilities anticipated to be placed on the City; and

WHEREAS, TischlerBise reviewed the existing demand for water, sewer, library, parks and recreation, police, fire and EMS, general government, sanitation, and transportation facilities, the existing facilities available to meet that demand, and the method of financing the existing systems; and

WHEREAS, TischlerBise additionally reviewed the contribution made or to be made in the future in cash or by taxes, fees, or assessments by property owners towards the capital costs of water, sewer, library, parks and recreation, police, fire and EMS, general government, sanitation, and transportation facilities; and

WHEREAS, TischlerBise reviewed and relied upon the current City level of service ("LOS") standards facility cost assumptions; and

WHEREAS, the population and residential development projections for the City indicate (i) that peak population will increase from approximately 75,834 persons in 2007 to 129,189 persons in the year 2027 and (ii) that peak housing units will increase from approximately 22,565 in 2007 to 38,475 in the year 2027; and

WHEREAS, TischlerBise has prepared the "Development Study Prepared for the City of Avondale," dated August 24, 2006, as may be further updated from time to time (the "Technical Report"), including the assumptions, population and residential and non-residential development projections, capital improvements and development fee calculations, which Technical Report has been submitted to and reviewed by City staff and officials; and

WHEREAS, the Technical Report has been presented to and reviewed by the City Council, which has determined (i) that development fees are necessary to offset the costs to the City associated with meeting the necessary public service and facility demand created by projected new residential and non-residential development, (ii) that the amount of the development fees bears a reasonable relationship to the burden imposed upon the City to provide new public facilities, (iii) that the expenditure of development fees, pursuant to the terms of this Ordinance, will result in a beneficial use to such new development reasonably related to the development fees, per dwelling unit, by type and per increment of non-residential development, (iv) that an "essential nexus" exists between the projected new residential development and the need for additional public facilities to be funded via the development fees and (v) that the amount of the development fees is roughly proportional to the fair share of the additional public facilities needed to provide adequate service to new development, while maintaining the existing LOS standard currently provided to City residents; and

WHEREAS, based on the findings and recommendations set forth in the Technical Report, the beneficial use of public improvements to be constructed with development fees is citywide; and

WHEREAS, the City has prepared, or is preparing, a capital improvement program that includes public facility improvements to ensure that new development paying development fees receive a beneficial use from public facilities constructed through the expenditure of development fees; and

WHEREAS, development fee funds shall be placed in separate interest-bearing funds and accounted for separately; and

WHEREAS, interest earned on development fee funds shall be credited to the development fee account to which it accrues; and

WHEREAS, expenditure of development fee funds is limited to those allowed by applicable state law; and

WHEREAS, a credit shall be provided toward the payment of development fees for required dedications of public sites and improvements; and

WHEREAS, Chapter 26 of the City Code sets forth a schedule for payment of development fees; and

WHEREAS, the policies related to the City's Commercial Infill Incentive Plan, as set forth in Chapter 19, Article IV, of the City Code, are in the public interest and are necessary to protect the public health, safety, and welfare of the citizens of the City; and

WHEREAS, the limited exemption for eligible infill developments, as provided by the City Code, will protect and advance such policies; and

WHEREAS, development fees will be assessed in a non-discriminatory manner; and

WHEREAS, an annual report consistent with state law shall be prepared and filed; and

WHEREAS, pursuant to ARIZ. REV. STAT. § 9-463.05, the City adopted a Notice of Intent to Assess a Development Fee on October 2, 2006 and a public hearing on the Development Fee was held on December 18, 2006.

NOW THEREFORE, BE IT ORDAINED BY THE COUNCIL OF THE CITY OF AVONDALE as follows:

SECTION 1. That the fee schedule located in Avondale City Code, Chapter 26, Development Fees, Article II, Development Fees by Public Facility Category, Section 26-22, Library facilities development fee, is hereby deleted in its entirety and replaced with the following:

Land Use	Impact Unit	Development Fee Amount
Residential		
Single Family	du	$346
Multi Family	du	$273
All Other Housing	du	$350

SECTION 2. That the Mayor, the City Manager, the City Clerk and the City Attorney are hereby authorized and directed to execute all documents and take all steps necessary to carry out the purpose and intent of this Ordinance.

SECTION 3. If any provision of this Ordinance is for any reason held by any court of competent jurisdiction to be unenforceable, such provision or portion hereof shall be deemed separate, distinct and independent of all other provisions and such holding shall not affect the validity of the remaining portions of this Ordinance.

SECTION 4. The provisions of this Ordinance shall take effect 90 days after the date of passage and adoption.

PASSED AND ADOPTED by the Council of the City of Avondale, December 18, 2006.

_____
Marie Lopez-Rogers, Mayor

ATTEST:

_____
Linda M. Farris, City Clerk

APPROVED AS TO FORM:

_____
Andrew J. McGuire, City Attorney

ORDINANCE NO. 1230-1206

AN ORDINANCE OF THE COUNCIL OF THE CITY OF AVONDALE, ARIZONA, AMENDING THE AVONDALE CITY CODE, CHAPTER 26, DEVELOPMENT FEES, ARTICLE II, DEVELOPMENT FEES BY PUBLIC FACILITY CATEGORY, RELATING TO CITYWIDE DEVELOPMENT FEES FOR PARKS AND RECREATION FACILITIES.

WHEREAS, pursuant to ARIZ. REV. STAT. § 9-463.05, the City of Avondale (the "City") is authorized to impose reasonable development fees to offset costs to the City associated with providing necessary public services; and

WHEREAS, water, sewer, library, parks and recreation, police, fire and emergency medical service ("EMS"), general government, sanitation, and transportation facilities are necessary public services; and

WHEREAS, the City must provide and fund capital public facilities required to provide such necessary public services; and

WHEREAS, the City retained TischlerBise, Inc. to analyze and assess growth and development projections to determine the additional demand created by new development for water, sewer, library, parks and recreation, police, fire and EMS, general government, sanitation, and transportation facilities anticipated to be placed on the City; and

WHEREAS, TischlerBise reviewed the existing demand for water, sewer, library, parks and recreation, police, fire and EMS, general government, sanitation, and transportation facilities, the existing facilities available to meet that demand, and the method of financing the existing systems; and

WHEREAS, TischlerBise additionally reviewed the contribution made or to be made in the future in cash or by taxes, fees, or assessments by property owners towards the capital costs of water, sewer, library, parks and recreation, police, fire and EMS, general government, sanitation, and transportation facilities; and

WHEREAS, TischlerBise reviewed and relied upon the current City level of service ("LOS") standards facility cost assumptions; and

WHEREAS, the population and residential development projections for the City indicate (i) that peak population will increase from approximately 75,834 persons in 2007 to 129,189

persons in the year 2027 and (ii) that peak housing units will increase from approximately 22,565 in 2007 to 38,475 in the year 2027; and

WHEREAS, TischlerBise has prepared the "Development Study Prepared for the City of Avondale," dated August 24, 2006, as may be further updated from time to time (the "Technical Report"), including the assumptions, population and residential and non-residential development projections, capital improvements and development fee calculations, which Technical Report has been submitted to and reviewed by City staff and officials; and

WHEREAS, the Technical Report has been presented to and reviewed by the City Council, which has determined (i) that development fees are necessary to offset the costs to the City associated with meeting the necessary public service and facility demand created by projected new residential and non-residential development, (ii) that the amount of the development fees bears a reasonable relationship to the burden imposed upon the City to provide new public facilities, (iii) that the expenditure of development fees, pursuant to the terms of this Ordinance, will result in a beneficial use to such new development reasonably related to the development fees, per dwelling unit, by type and per increment of non-residential development, (iv) that an "essential nexus" exists between the projected new residential development and the need for additional public facilities to be funded via the development fees and (v) that the amount of the development fees is roughly proportional to the fair share of the additional public facilities needed to provide adequate service to new development, while maintaining the existing LOS standard currently provided to City residents; and

WHEREAS, based on the findings and recommendations set forth in the Technical Report, the beneficial use of public improvements to be constructed with development fees is citywide; and

WHEREAS, the City has prepared, or is preparing, a capital improvement program that includes public facility improvements to ensure that new development paying development fees receive a beneficial use from public facilities constructed through the expenditure of development fees; and

WHEREAS, development fee funds shall be placed in separate interest-bearing funds and accounted for separately; and

WHEREAS, interest earned on development fee funds shall be credited to the development fee account to which it accrues; and

WHEREAS, expenditure of development fee funds is limited to those allowed by applicable state law; and

WHEREAS, a credit shall be provided toward the payment of development fees for required dedications of public sites and improvements; and

WHEREAS, Chapter 26 of the City Code sets forth a schedule for payment of development fees; and

WHEREAS, the policies related to the City's Commercial Infill Incentive Plan, as set forth in Chapter 19, Article IV, of the City Code, are in the public interest and are necessary to protect the public health, safety, and welfare of the citizens of the City; and

WHEREAS, the limited exemption for eligible infill developments, as provided by the City Code, will protect and advance such policies; and

WHEREAS, development fees will be assessed in a non-discriminatory manner; and

WHEREAS, an annual report consistent with state law shall be prepared and filed; and

WHEREAS, pursuant to ARIZ. REV. STAT. § 9-463.05, the City adopted a Notice of Intent to Assess a Development Fee on October 2, 2006 and a public hearing on the Development Fee was held on December 18, 2006.

NOW THEREFORE, BE IT ORDAINED BY THE COUNCIL OF THE CITY OF AVONDALE as follows:

SECTION 1. That the fee schedule located in Avondale City Code, Chapter 26, Development Fees, Article II, Development Fees by Public Facility Category, Section 26-23, Parks and recreation facilities development fee, is hereby deleted in its entirety and replaced with the following:

Land Use	Impact Unit	Development Fee Amount
Residential		
Single Family	du	$2,501
Multi Family	du	$1,970
All Other Housing	du	$2,526

SECTION 2. That the Mayor, the City Manager, the City Clerk and the City Attorney are hereby authorized and directed to execute all documents and take all steps necessary to carry out the purpose and intent of this Ordinance.

SECTION 3. If any provision of this Ordinance is for any reason held by any court of competent jurisdiction to be unenforceable, such provision or portion hereof shall be deemed separate, distinct and independent of all other provisions and such holding shall not affect the validity of the remaining portions of this Ordinance.

SECTION 4. The provisions of this Ordinance shall take effect 90 days after the date of passage and adoption.

PASSED AND ADOPTED by the Council of the City of Avondale, December 18, 2006.

_____
Marie Lopez-Rogers, Mayor

ATTEST:

_____
Linda M. Farris, City Clerk

APPROVED AS TO FORM:

_____
Andrew J. McGuire, City Attorney

ORDINANCE NO. 1231-1206

AN ORDINANCE OF THE COUNCIL OF THE CITY OF AVONDALE, ARIZONA, AMENDING THE AVONDALE CITY CODE, CHAPTER 26, DEVELOPMENT FEES, ARTICLE II, DEVELOPMENT FEES BY PUBLIC FACILITY CATEGORY, RELATING TO CITYWIDE DEVELOPMENT FEES FOR POLICE FACILITIES.

WHEREAS, pursuant to ARIZ. REV. STAT. § 9-463.05, the City of Avondale (the "City") is authorized to impose reasonable development fees to offset costs to the City associated with providing necessary public services; and

WHEREAS, water, sewer, library, parks and recreation, police, fire and emergency medical service ("EMS"), general government, sanitation, and transportation facilities are necessary public services; and

WHEREAS, the City must provide and fund capital public facilities required to provide such necessary public services; and

WHEREAS, the City retained TischlerBise, Inc. to analyze and assess growth and development projections to determine the additional demand created by new development for water, sewer, library, parks and recreation, police, fire and EMS, general government, sanitation, and transportation facilities anticipated to be placed on the City; and

WHEREAS, TischlerBise reviewed the existing demand for water, sewer, library, parks and recreation, police, fire and EMS, general government, sanitation, and transportation facilities, the existing facilities available to meet that demand, and the method of financing the existing systems; and

WHEREAS, TischlerBise additionally reviewed the contribution made or to be made in the future in cash or by taxes, fees, or assessments by property owners towards the capital costs of water, sewer, library, parks and recreation, police, fire and EMS, general government, sanitation, and transportation facilities; and

WHEREAS, TischlerBise reviewed and relied upon the current City level of service ("LOS") standards facility cost assumptions; and

WHEREAS, the population and residential development projections for the City indicate (i) that peak population will increase from approximately 75,834 persons in 2007 to 129,189 persons in the year 2027 and (ii) that peak housing units will increase from approximately 22,565 in 2007 to 38,475 in the year 2027; and

WHEREAS, TischlerBise has prepared the "Development Study Prepared for the City of Avondale," dated August 24, 2006, as may be further updated from time to time (the "Technical Report"), including the assumptions, population and residential and non-residential development projections, capital improvements and development fee calculations, which Technical Report has been submitted to and reviewed by City staff and officials; and

WHEREAS, the Technical Report has been presented to and reviewed by the City Council, which has determined (i) that development fees are necessary to offset the costs to the City associated with meeting the necessary public service and facility demand created by projected new residential and non-residential development, (ii) that the amount of the development fees bears a reasonable relationship to the burden imposed upon the City to provide new public facilities, (iii) that the expenditure of development fees, pursuant to the terms of this Ordinance, will result in a beneficial use to such new development reasonably related to the development fees, per dwelling unit, by type and per increment of non-residential development, (iv) that an "essential nexus" exists between the projected new residential development and the need for additional public facilities to be funded via the development fees and (v) that the amount of the development fees is roughly proportional to the fair share of the additional public facilities needed to provide adequate service to new development, while maintaining the existing LOS standard currently provided to City residents; and

WHEREAS, based on the findings and recommendations set forth in the Technical Report, the beneficial use of public improvements to be constructed with development fees is citywide; and

WHEREAS, the City has prepared, or is preparing, a capital improvement program that includes public facility improvements to ensure that new development paying development fees receive a beneficial use from public facilities constructed through the expenditure of development fees; and

WHEREAS, development fee funds shall be placed in separate interest-bearing funds and accounted for separately; and

WHEREAS, interest earned on development fee funds shall be credited to the development fee account to which it accrues; and

WHEREAS, expenditure of development fee funds is limited to those allowed by applicable state law; and

WHEREAS, a credit shall be provided toward the payment of development fees for required dedications of public sites and improvements; and

WHEREAS, Chapter 26 of the City Code sets forth a schedule for payment of development fees; and

WHEREAS, the policies related to the City's Commercial Infill Incentive Plan, as set forth in Chapter 19, Article IV, of the City Code, are in the public interest and are necessary to protect the public health, safety, and welfare of the citizens of the City; and

WHEREAS, the limited exemption for eligible infill developments, as provided by the City Code, will protect and advance such policies; and

WHEREAS, development fees will be assessed in a non-discriminatory manner; and

WHEREAS, an annual report consistent with state law shall be prepared and filed; and

WHEREAS, pursuant to ARIZ. REV. STAT. § 9-463.05, the City adopted a Notice of Intent to Assess a Development Fee on October 2, 2006 and a public hearing on the Development Fee was held on December 18, 2006.

NOW THEREFORE, BE IT ORDAINED BY THE COUNCIL OF THE CITY OF AVONDALE as follows:

SECTION 1. That the fee schedule located in Avondale City Code, Chapter 26, Development Fees, Article II, Development Fees by Public Facility Category, Section 26-24, Police facilities development fee, is hereby deleted in its entirety and replaced with the following:

Land Use	Impact Unit	Development Fee Amount
Residential		
Single Family	du	$344
Multi Family	du	$271
All Other Housing	du	$348
Commercial/Shopping Center		
0-25,000	1,000 sf	$1,903
25,001-50,000	1,000 sf	$1,653
50,001-100,000	1,000 sf	$1,380
100,001-200,000	1,000 sf	$1,181
Greater than 200,000	1,000 sf	$1,004
Office/Institutional		
0-10,000	1,000 sf	$698
10,001-25,000	1,000 sf	$565
25,001-50,000	1,000 sf	$482
50,001-100,000	1,000 sf	$411
Greater than 100,000	1,000 sf	$350
Business Park	1,000 sf	$393
Light Industrial	1,000 sf	$214
Warehousing	1,000 sf	$152
Manufacturing	1,000 sf	$117
Motel	room	$173

SECTION 2. That the Mayor, the City Manager, the City Clerk and the City Attorney are hereby authorized and directed to execute all documents and take all steps necessary to carry out the purpose and intent of this Ordinance.

SECTION 3. If any provision of this Ordinance is for any reason held by any court of competent jurisdiction to be unenforceable, such provision or portion hereof shall be deemed separate, distinct and independent of all other provisions and such holding shall not affect the validity of the remaining portions of this Ordinance.

SECTION 4. The provisions of this Ordinance shall take effect 90 days after the date of passage and adoption.

PASSED AND ADOPTED by the Council of the City of Avondale, December 18, 2006.

_____
Marie Lopez-Rogers, Mayor

ATTEST:

_____
Linda M. Farris, City Clerk

APPROVED AS TO FORM:

_____
Andrew J. McGuire, City Attorney

ORDINANCE NO. 1232-1206

AN ORDINANCE OF THE COUNCIL OF THE CITY OF AVONDALE, ARIZONA, AMENDING THE AVONDALE CITY CODE, CHAPTER 26, DEVELOPMENT FEES, ARTICLE II, DEVELOPMENT FEES BY PUBLIC FACILITY CATEGORY, RELATING TO CITYWIDE DEVELOPMENT FEES FOR FIRE AND EMERGENCY MEDICAL SERVICES FACILITIES.

WHEREAS, pursuant to ARIZ. REV. STAT. § 9-463.05, the City of Avondale (the "City") is authorized to impose reasonable development fees to offset costs to the City associated with providing necessary public services; and

WHEREAS, water, sewer, library, parks and recreation, police, fire and emergency medical service ("EMS"), general government, sanitation, and transportation facilities are necessary public services; and

WHEREAS, the City must provide and fund capital public facilities required to provide such necessary public services; and

WHEREAS, the City retained TischlerBise, Inc. to analyze and assess growth and development projections to determine the additional demand created by new development for water, sewer, library, parks and recreation, police, fire and EMS, general government, sanitation, and transportation facilities anticipated to be placed on the City; and

WHEREAS, TischlerBise reviewed the existing demand for water, sewer, library, parks and recreation, police, fire and EMS, general government, sanitation, and transportation facilities, the existing facilities available to meet that demand, and the method of financing the existing systems; and

WHEREAS, TischlerBise additionally reviewed the contribution made or to be made in the future in cash or by taxes, fees, or assessments by property owners towards the capital costs of water, sewer, library, parks and recreation, police, fire and EMS, general government, sanitation, and transportation facilities; and

WHEREAS, TischlerBise reviewed and relied upon the current City level of service ("LOS") standards facility cost assumptions; and

WHEREAS, the population and residential development projections for the City indicate (i) that peak population will increase from approximately 75,834 persons in 2007 to 129,189 persons in the year 2027 and (ii) that peak housing units will increase from approximately 22,565 in 2007 to 38,475 in the year 2027; and

WHEREAS, TischlerBise has prepared the "Development Study Prepared for the City of Avondale," dated August 24, 2006, as may be further updated from time to time (the "Technical Report"), including the assumptions, population and residential and non-residential development projections, capital improvements and development fee calculations, which Technical Report has been submitted to and reviewed by City staff and officials; and

WHEREAS, the Technical Report has been presented to and reviewed by the City Council, which has determined (i) that development fees are necessary to offset the costs to the City associated with meeting the necessary public service and facility demand created by projected new residential and non-residential development, (ii) that the amount of the development fees bears a reasonable relationship to the burden imposed upon the City to provide new public facilities, (iii) that the expenditure of development fees, pursuant to the terms of this Ordinance, will result in a beneficial use to such new development reasonably related to the development fees, per dwelling unit, by type and per increment of non-residential development, (iv) that an "essential nexus" exists between the projected new residential development and the need for additional public facilities to be funded via the development fees and (v) that the amount of the development fees is roughly proportional to the fair share of the additional public facilities needed to provide adequate service to new development, while maintaining the existing LOS standard currently provided to City residents; and

WHEREAS, based on the findings and recommendations set forth in the Technical Report, the beneficial use of public improvements to be constructed with development fees is citywide; and

WHEREAS, the City has prepared, or is preparing, a capital improvement program that includes public facility improvements to ensure that new development paying development fees receive a beneficial use from public facilities constructed through the expenditure of development fees; and

WHEREAS, development fee funds shall be placed in separate interest-bearing funds and accounted for separately; and

WHEREAS, interest earned on development fee funds shall be credited to the development fee account to which it accrues; and

WHEREAS, expenditure of development fee funds is limited to those allowed by applicable state law; and

WHEREAS, a credit shall be provided toward the payment of development fees for required dedications of public sites and improvements; and

WHEREAS, Chapter 26 of the City Code sets forth a schedule for payment of development fees; and

WHEREAS, the policies related to the City's Commercial Infill Incentive Plan, as set forth in Chapter 19, Article IV, of the City Code, are in the public interest and are necessary to protect the public health, safety, and welfare of the citizens of the City; and

WHEREAS, the limited exemption for eligible infill developments, as provided by the City Code, will protect and advance such policies; and

WHEREAS, development fees will be assessed in a non-discriminatory manner; and

WHEREAS, an annual report consistent with state law shall be prepared and filed; and

WHEREAS, pursuant to ARIZ. REV. STAT. § 9-463.05, the City adopted a Notice of Intent to Assess a Development Fee on October 2, 2006 and a public hearing on the Development Fee was held on December 18, 2006.

NOW THEREFORE, BE IT ORDAINED BY THE COUNCIL OF THE CITY OF AVONDALE as follows:

SECTION 1. That the fee schedule located in Avondale City Code, Chapter 26, Development Fees, Article II, Development Fees by Public Facility Category, Section 26-25, Fire and emergency medical services facilities development fee, is hereby deleted in its entirety and replaced with the following:

Land Use	Impact Unit	Development Fee Amount
Residential		
Single Family	du	$996
Multi Family	du	$785
All Other Housing	du	$1,006
Commercial/Shopping Center		
0-25,000	1,000 sf	$963
25,001-50,000	1,000 sf	$827
50,001-100,000	1,000 sf	$723
100,001-200,000	1,000 sf	$642
Greater than 200,000	1,000 sf	$578
Office/Institutional		
0-10,000	1,000 sf	$1,295
10,001-25,000	1,000 sf	$1,200
25,001-50,000	1,000 sf	$1,131
50,001-100,000	1,000 sf	$1,067
Greater than 100,000	1,000 sf	$969
Business Park	1,000 sf	$914
Light Industrial	1,000 sf	$668
Warehousing	1,000 sf	$370
Manufacturing	1,000 sf	$517
Motel	room	$127

SECTION 2. That the Mayor, the City Manager, the City Clerk and the City Attorney are hereby authorized and directed to execute all documents and take all steps necessary to carry out the purpose and intent of this Ordinance.

SECTION 3. If any provision of this Ordinance is for any reason held by any court of competent jurisdiction to be unenforceable, such provision or portion hereof shall be deemed separate, distinct and independent of all other provisions and such holding shall not affect the validity of the remaining portions of this Ordinance.

SECTION 4. The provisions of this Ordinance shall take effect 90 days after the date of passage and adoption.

PASSED AND ADOPTED by the Council of the City of Avondale, December 18, 2006.

_____
Marie Lopez-Rogers, Mayor

ATTEST:

_____
Linda M. Farris, City Clerk

APPROVED AS TO FORM:

_____
Andrew J. McGuire, City Attorney

ORDINANCE NO. 1233-1206

AN ORDINANCE OF THE COUNCIL OF THE CITY OF AVONDALE, ARIZONA, AMENDING THE AVONDALE CITY CODE, CHAPTER 26, DEVELOPMENT FEES, ARTICLE II, DEVELOPMENT FEES BY PUBLIC FACILITY CATEGORY, RELATING TO CITYWIDE DEVELOPMENT FEES FOR GENERAL GOVERNMENT FACILITIES.

WHEREAS, pursuant to ARIZ. REV. STAT. § 9-463.05, the City of Avondale (the "City") is authorized to impose reasonable development fees to offset costs to the City associated with providing necessary public services; and

WHEREAS, water, sewer, library, parks and recreation, police, fire and emergency medical service ("EMS"), general government, sanitation, and transportation facilities are necessary public services; and

WHEREAS, the City must provide and fund capital public facilities required to provide such necessary public services; and

WHEREAS, the City retained TischlerBise, Inc. to analyze and assess growth and development projections to determine the additional demand created by new development for water, sewer, library, parks and recreation, police, fire and EMS, general government, sanitation, and transportation facilities anticipated to be placed on the City; and

WHEREAS, TischlerBise reviewed the existing demand for water, sewer, library, parks and recreation, police, fire and EMS, general government, sanitation, and transportation facilities, the existing facilities available to meet that demand, and the method of financing the existing systems; and

WHEREAS, TischlerBise additionally reviewed the contribution made or to be made in the future in cash or by taxes, fees, or assessments by property owners towards the capital costs of water, sewer, library, parks and recreation, police, fire and EMS, general government, sanitation, and transportation facilities; and

WHEREAS, TischlerBise reviewed and relied upon the current City level of service ("LOS") standards facility cost assumptions; and

WHEREAS, the population and residential development projections for the City indicate (i) that peak population will increase from approximately 75,834 persons in 2007 to 129,189 persons in the year 2027 and (ii) that peak housing units will increase from approximately 22,565 in 2007 to 38,475 in the year 2027; and

WHEREAS, TischlerBise has prepared the "Development Study Prepared for the City of Avondale," dated August 24, 2006, as may be further updated from time to time (the "Technical Report"), including the assumptions, population and residential and non-residential development projections, capital improvements and development fee calculations, which Technical Report has been submitted to and reviewed by City staff and officials; and

WHEREAS, the Technical Report has been presented to and reviewed by the City Council, which has determined (i) that development fees are necessary to offset the costs to the City associated with meeting the necessary public service and facility demand created by projected new residential and non-residential development, (ii) that the amount of the development fees bears a reasonable relationship to the burden imposed upon the City to provide new public facilities, (iii) that the expenditure of development fees, pursuant to the terms of this Ordinance, will result in a beneficial use to such new development reasonably related to the development fees, per dwelling unit, by type and per increment of non-residential development, (iv) that an "essential nexus" exists between the projected new residential development and the need for additional public facilities to be funded via the development fees and (v) that the amount of the development fees is roughly proportional to the fair share of the additional public facilities needed to provide adequate service to new development, while maintaining the existing LOS standard currently provided to City residents; and

WHEREAS, based on the findings and recommendations set forth in the Technical Report, the beneficial use of public improvements to be constructed with development fees is citywide; and

WHEREAS, the City has prepared, or is preparing, a capital improvement program that includes public facility improvements to ensure that new development paying development fees receive a beneficial use from public facilities constructed through the expenditure of development fees; and

WHEREAS, development fee funds shall be placed in separate interest-bearing funds and accounted for separately; and

WHEREAS, interest earned on development fee funds shall be credited to the development fee account to which it accrues; and

WHEREAS, expenditure of development fee funds is limited to those allowed by applicable state law; and

WHEREAS, a credit shall be provided toward the payment of development fees for required dedications of public sites and improvements; and

WHEREAS, Chapter 26 of the City Code sets forth a schedule for payment of development fees; and

WHEREAS, the policies related to the City's Commercial Infill Incentive Plan, as set forth in Chapter 19, Article IV, of the City Code, are in the public interest and are necessary to protect the public health, safety, and welfare of the citizens of the City; and

WHEREAS, the limited exemption for eligible infill developments, as provided by the City Code, will protect and advance such policies; and

WHEREAS, development fees will be assessed in a non-discriminatory manner; and

WHEREAS, an annual report consistent with state law shall be prepared and filed; and

WHEREAS, pursuant to ARIZ. REV. STAT. § 9-463.05, the City adopted a Notice of Intent to Assess a Development Fee on October 2, 2006 and a public hearing on the Development Fee was held on December 18, 2006.

NOW THEREFORE, BE IT ORDAINED BY THE COUNCIL OF THE CITY OF AVONDALE as follows:

SECTION 1. That the fee schedule located in Avondale City Code, Chapter 26, Development Fees, Article II, Development Fees by Public Facility Category, Section 26-26, General government facilities development fee, is hereby deleted in its entirety and replaced with the following:

Land Use	Impact Unit	Development Fee Amount
Residential		
Single Family	du	$929
Multi Family	du	$731
All Other Housing	du	$938
Commercial/Shopping Center		
0-25,000	1,000 sf	$1,171
25,001-50,000	1,000 sf	$1,010
50,001-100,000	1,000 sf	$871
100,001-200,000	1,000 sf	$765
Greater than 200,000	1,000 sf	$678
Office/Institutional		
0-10,000	1,000 sf	$1,242
10,001-25,000	1,000 sf	$1,135
25,001-50,000	1,000 sf	$1,061
50,001-100,000	1,000 sf	$993
Greater than 100,000	1,000 sf	$897
Business Park	1,000 sf	$858
Light Industrial	1,000 sf	$614
Warehousing	1,000 sf	$346
Manufacturing	1,000 sf	$467
Motel	room	$140

SECTION 2. That the Mayor, the City Manager, the City Clerk and the City Attorney are hereby authorized and directed to execute all documents and take all steps necessary to carry out the purpose and intent of this Ordinance.

SECTION 3. If any provision of this Ordinance is for any reason held by any court of competent jurisdiction to be unenforceable, such provision or portion hereof shall be deemed separate, distinct and independent of all other provisions and such holding shall not affect the validity of the remaining portions of this Ordinance.

SECTION 4. The provisions of this Ordinance shall take effect 90 days after the date of passage and adoption.

PASSED AND ADOPTED by the Council of the City of Avondale, December 18, 2006.

_____
Marie Lopez-Rogers, Mayor

ATTEST:

_____
Linda M. Farris, City Clerk

APPROVED AS TO FORM:

_____
Andrew J. McGuire, City Attorney

ORDINANCE NO. 1234-1206

AN ORDINANCE OF THE COUNCIL OF THE CITY OF AVONDALE, ARIZONA, AMENDING THE AVONDALE CITY CODE, CHAPTER 26, DEVELOPMENT FEES, ARTICLE II, DEVELOPMENT FEES BY PUBLIC FACILITY CATEGORY, RELATING TO CITYWIDE DEVELOPMENT FEES FOR SANITATION FACILITIES.

WHEREAS, pursuant to ARIZ. REV. STAT. § 9-463.05, the City of Avondale (the "City") is authorized to impose reasonable development fees to offset costs to the City associated with providing necessary public services; and

WHEREAS, water, sewer, library, parks and recreation, police, fire and emergency medical service ("EMS"), general government, sanitation, and transportation facilities are necessary public services; and

WHEREAS, the City must provide and fund capital public facilities required to provide such necessary public services; and

WHEREAS, the City retained TischlerBise, Inc. to analyze and assess growth and development projections to determine the additional demand created by new development for water, sewer, library, parks and recreation, police, fire and EMS, general government, sanitation, and transportation facilities anticipated to be placed on the City; and

WHEREAS, TischlerBise reviewed the existing demand for water, sewer, library, parks and recreation, police, fire and EMS, general government, sanitation, and transportation facilities, the existing facilities available to meet that demand, and the method of financing the existing systems; and

WHEREAS, TischlerBise additionally reviewed the contribution made or to be made in the future in cash or by taxes, fees, or assessments by property owners towards the capital costs of water, sewer, library, parks and recreation, police, fire and EMS, general government, sanitation, and transportation facilities; and

WHEREAS, TischlerBise reviewed and relied upon the current City level of service ("LOS") standards facility cost assumptions; and

WHEREAS, the population and residential development projections for the City indicate (i) that peak population will increase from approximately 75,834 persons in 2007 to 129,189

persons in the year 2027 and (ii) that peak housing units will increase from approximately 22,565 in 2007 to 38,475 in the year 2027; and

WHEREAS, TischlerBise has prepared the "Development Study Prepared for the City of Avondale," dated August 24, 2006, as may be further updated from time to time (the "Technical Report"), including the assumptions, population and residential and non-residential development projections, capital improvements and development fee calculations, which Technical Report has been submitted to and reviewed by City staff and officials; and

WHEREAS, the Technical Report has been presented to and reviewed by the City Council, which has determined (i) that development fees are necessary to offset the costs to the City associated with meeting the necessary public service and facility demand created by projected new residential and non-residential development, (ii) that the amount of the development fees bears a reasonable relationship to the burden imposed upon the City to provide new public facilities, (iii) that the expenditure of development fees, pursuant to the terms of this Ordinance, will result in a beneficial use to such new development reasonably related to the development fees, per dwelling unit, by type and per increment of non-residential development, (iv) that an "essential nexus" exists between the projected new residential development and the need for additional public facilities to be funded via the development fees and (v) that the amount of the development fees is roughly proportional to the fair share of the additional public facilities needed to provide adequate service to new development, while maintaining the existing LOS standard currently provided to City residents; and

WHEREAS, based on the findings and recommendations set forth in the Technical Report, the beneficial use of public improvements to be constructed with development fees is citywide; and

WHEREAS, the City has prepared, or is preparing, a capital improvement program that includes public facility improvements to ensure that new development paying development fees receive a beneficial use from public facilities constructed through the expenditure of development fees; and

WHEREAS, development fee funds shall be placed in separate interest-bearing funds and accounted for separately; and

WHEREAS, interest earned on development fee funds shall be credited to the development fee account to which it accrues; and

WHEREAS, expenditure of development fee funds is limited to those allowed by applicable state law; and

WHEREAS, a credit shall be provided toward the payment of development fees for required dedications of public sites and improvements; and

WHEREAS, Chapter 26 of the City Code sets forth a schedule for payment of development fees; and

WHEREAS, the policies related to the City's Commercial Infill Incentive Plan, as set forth in Chapter 19, Article IV, of the City Code, are in the public interest and are necessary to protect the public health, safety, and welfare of the citizens of the City; and

WHEREAS, the limited exemption for eligible infill developments, as provided by the City Code, will protect and advance such policies; and

WHEREAS, development fees will be assessed in a non-discriminatory manner; and

WHEREAS, an annual report consistent with state law shall be prepared and filed; and

WHEREAS, pursuant to ARIZ. REV. STAT. § 9-463.05, the City adopted a Notice of Intent to Assess a Development Fee on October 2, 2006 and a public hearing on the Development Fee was held on December 18, 2006.

NOW THEREFORE, BE IT ORDAINED BY THE COUNCIL OF THE CITY OF AVONDALE as follows:

SECTION 1. That the fee schedule located in Avondale City Code, Chapter 26, Development Fees, Article II, Development Fees by Public Facility Category, Section 26-27, Sanitation facilities development fee, is hereby deleted in its entirety and replaced with the following:

Land Use	Impact Unit	Development Fee Amount
Residential		
Single Family	du	$304

SECTION 2. That the Mayor, the City Manager, the City Clerk and the City Attorney are hereby authorized and directed to execute all documents and take all steps necessary to carry out the purpose and intent of this Ordinance.

SECTION 3. If any provision of this Ordinance is for any reason held by any court of competent jurisdiction to be unenforceable, such provision or portion hereof shall be deemed separate, distinct and independent of all other provisions and such holding shall not affect the validity of the remaining portions of this Ordinance.

SECTION 4. The provisions of this Ordinance shall take effect 90 days after the date of passage and adoption.

PASSED AND ADOPTED by the Council of the City of Avondale, December 18, 2006.

_____
Marie Lopez-Rogers, Mayor

ATTEST:

_____
Linda M. Farris, City Clerk

APPROVED AS TO FORM:

_____
Andrew J. McGuire, City Attorney

ORDINANCE NO. 1235-1206

AN ORDINANCE OF THE COUNCIL OF THE CITY OF AVONDALE, ARIZONA, AMENDING THE AVONDALE CITY CODE, CHAPTER 26, DEVELOPMENT FEES, ARTICLE II, DEVELOPMENT FEES BY PUBLIC FACILITY CATEGORY, RELATING TO CITYWIDE DEVELOPMENT FEES FOR TRANSPORTATION FACILITIES.

WHEREAS, pursuant to ARIZ. REV. STAT. § 9-463.05, the City of Avondale (the "City") is authorized to impose reasonable development fees to offset costs to the City associated with providing necessary public services; and

WHEREAS, water, sewer, library, parks and recreation, police, fire and emergency medical service ("EMS"), general government, sanitation, and transportation facilities are necessary public services; and

WHEREAS, the City must provide and fund capital public facilities required to provide such necessary public services; and

WHEREAS, the City retained TischlerBise, Inc. to analyze and assess growth and development projections to determine the additional demand created by new development for water, sewer, library, parks and recreation, police, fire and EMS, general government, sanitation, and transportation facilities anticipated to be placed on the City; and

WHEREAS, TischlerBise reviewed the existing demand for water, sewer, library, parks and recreation, police, fire and EMS, general government, sanitation, and transportation facilities, the existing facilities available to meet that demand, and the method of financing the existing systems; and

WHEREAS, TischlerBise additionally reviewed the contribution made or to be made in the future in cash or by taxes, fees, or assessments by property owners towards the capital costs of water, sewer, library, parks and recreation, police, fire and EMS, general government, sanitation, and transportation facilities; and

WHEREAS, TischlerBise reviewed and relied upon the current City level of service ("LOS") standards facility cost assumptions; and

WHEREAS, the population and residential development projections for the City indicate (i) that peak population will increase from approximately 75,834 persons in 2007 to 129,189

persons in the year 2027 and (ii) that peak housing units will increase from approximately 22,565 in 2007 to 38,475 in the year 2027; and

WHEREAS, TischlerBise has prepared the "Development Study Prepared for the City of Avondale," dated August 24, 2006, as may be further updated from time to time (the "Technical Report"), including the assumptions, population and residential and non-residential development projections, capital improvements and development fee calculations, which Technical Report has been submitted to and reviewed by City staff and officials; and

WHEREAS, the Technical Report has been presented to and reviewed by the City Council, which has determined (i) that development fees are necessary to offset the costs to the City associated with meeting the necessary public service and facility demand created by projected new residential and non-residential development, (ii) that the amount of the development fees bears a reasonable relationship to the burden imposed upon the City to provide new public facilities, (iii) that the expenditure of development fees, pursuant to the terms of this Ordinance, will result in a beneficial use to such new development reasonably related to the development fees, per dwelling unit, by type and per increment of non-residential development, (iv) that an "essential nexus" exists between the projected new residential development and the need for additional public facilities to be funded via the development fees and (v) that the amount of the development fees is roughly proportional to the fair share of the additional public facilities needed to provide adequate service to new development, while maintaining the existing LOS standard currently provided to City residents; and

WHEREAS, based on the findings and recommendations set forth in the Technical Report, the beneficial use of public improvements to be constructed with development fees is citywide; and

WHEREAS, the City has prepared, or is preparing, a capital improvement program that includes public facility improvements to ensure that new development paying development fees receive a beneficial use from public facilities constructed through the expenditure of development fees; and

WHEREAS, development fee funds shall be placed in separate interest-bearing funds and accounted for separately; and

WHEREAS, interest earned on development fee funds shall be credited to the development fee account to which it accrues; and

WHEREAS, expenditure of development fee funds is limited to those allowed by applicable state law; and

WHEREAS, a credit shall be provided toward the payment of development fees for required dedications of public sites and improvements; and

WHEREAS, Chapter 26 of the City Code sets forth a schedule for payment of development fees; and

WHEREAS, the policies related to the City's Commercial Infill Incentive Plan, as set forth in Chapter 19, Article IV, of the City Code, are in the public interest and are necessary to protect the public health, safety, and welfare of the citizens of the City; and

WHEREAS, the limited exemption for eligible infill developments, as provided by the City Code, will protect and advance such policies; and

WHEREAS, development fees will be assessed in a non-discriminatory manner; and

WHEREAS, an annual report consistent with state law shall be prepared and filed; and

WHEREAS, pursuant to ARIZ. REV. STAT. § 9-463.05, the City adopted a Notice of Intent to Assess a Development Fee on October 2, 2006 and a public hearing on the Development Fee was held on December 18, 2006.

NOW THEREFORE, BE IT ORDAINED BY THE COUNCIL OF THE CITY OF AVONDALE as follows:

SECTION 1. That the fee schedule located in Avondale City Code, Chapter 26, Development Fees, Article II, Development Fees by Public Facility Category, Section 26-28, Transportation facilities development fee, is hereby deleted in its entirety and replaced with the following:

Land Use	Impact Unit	Development Fee Amount
Residential		
Single Family	du	$1,857
Multi Family	du	$1,137
All Other Housing	du	$968
Commercial/Shopping Center		
0-25,000	1,000 sf	$5,478
25,001-50,000	1,000 sf	$4,758
50,001-100,000	1,000 sf	$3,974
100,001-200,000	1,000 sf	$3,401
Greater than 200,000	1,000 sf	$2,891
Office/Institutional		
0-10,000	1,000 sf	$2,192
10,001-25,000	1,000 sf	$1,775
25,001-50,000	1,000 sf	$1,514
50,001-100,000	1,000 sf	$1,290
Greater than 100,000	1,000 sf	$1,100
Business Park	1,000 sf	$1,234
Light Industrial	1,000 sf	$674
Warehousing	1,000 sf	$480
Manufacturing	1,000 sf	$370
Motel	room	$545

SECTION 2. That the Mayor, the City Manager, the City Clerk and the City Attorney are hereby authorized and directed to execute all documents and take all steps necessary to carry out the purpose and intent of this Ordinance.

SECTION 3. If any provision of this Ordinance is for any reason held by any court of competent jurisdiction to be unenforceable, such provision or portion hereof shall be deemed separate, distinct and independent of all other provisions and such holding shall not affect the validity of the remaining portions of this Ordinance.

SECTION 4. The provisions of this Ordinance shall take effect 90 days after the date of passage and adoption.

PASSED AND ADOPTED by the Council of the City of Avondale, December 18, 2006.

_____
Marie Lopez-Rogers, Mayor

ATTEST:

_____
Linda M. Farris, City Clerk

APPROVED AS TO FORM:

_____
Andrew J. McGuire, City Attorney

ORDINANCE NO. 1226-1206

AN ORDINANCE OF THE COUNCIL OF THE CITY OF AVONDALE, ARIZONA, AMENDING THE AVONDALE CITY CODE, CHAPTER 26, DEVELOPMENT FEES, BY ADDING ADMINISTRATIVE AND PROCEDURAL REQUIREMENTS RELATING TO CITYWIDE DEVELOPMENT FEES.

BE IT ORDAINED BY THE COUNCIL OF THE CITY OF AVONDALE as follows:

SECTION 1. That the Avondale City Code, Chapter 26, Development Fees, Article VI, Commercial Infill Incentive Plan, is hereby removed, in its entirety, from Chapter 26 and reinserted as the new Article IV of Chapter 19, Planning and Zoning, of the Avondale City Code.

SECTION 2. That the Avondale City Code, Chapter 26, Development Fees, Article XI, Residential Infill Incentive Plan, is hereby removed, in its entirety, from Chapter 26 and reinserted as the new Article V of Chapter 19, Planning and Zoning, of the Avondale City Code.

SECTION 3. That the remainder of the Avondale City Code, Chapter 26, Development Fees, is hereby deleted in its entirety and replaced with the following:

CHAPTER 26 – DEVELOPMENT FEES

Article I – Procedural and Administrative Requirements

Sections

26-1 Adoption of technical reports
26-2 Interpretation of chapter and fee schedule
26-3 Effect on other regulations and requirements
26-4 Definitions
26-5 Applicability of this chapter
26-6 Collection of development fees
26-7 Offsets against development fees
26-8 Use of funds collected; development fee accounts
26-9 Refunds
26-10 Updates; annual reports
26-11 Appeals

26-1 Adoption of technical report.

The City hereby adopts and incorporates by reference the report entitled "Development Fee Study Prepared for City of Avondale," prepared by TischlerBise, and dated August 24, 2006 (referred to herein as the "Technical Report"), which supports the amounts and reasonableness of the development fees imposed by this Chapter.

26-2 Interpretation of ordinance and fee schedule.

Interpretation of the provisions of this Chapter shall be made by the Director.

26-3 Effect on other regulations and requirements.

(a) This Chapter may not be construed to alter, amend, or modify any other provision of the City Code. Other provisions of the City Code shall be operative and remain in full force and effect notwithstanding any contrary provisions, definitions or intentions that are or may be expressed or implied in this Chapter.

(b) The payment of development fees shall not entitle the applicant to a building permit unless all other applicable land use, zoning, planning, and other applicable requirements, standards, and conditions have been met. Such other requirements, standards, and conditions are independent of the requirement for payment of development fees required by this Chapter.

(c) This Chapter, including the specific development fees for particular public facilities, shall not affect, in any manner, the permissible use of property, density, or intensity of development, design and improvement standards, or other applicable standards or requirements of the City Code, zoning ordinance, subdivision ordinance, general plan or other regulation, ordinance or code of the City.

26-4 Definitions. The following terms, words and phrases, when used in this Chapter, shall have the meanings ascribed to them in this Section:

(a) **"Capital improvements"** include, but are not limited to, costs associated with the planning, design, and construction of new or expanded public facilities, which have a life expectancy of three (3) or more years, and the land acquisition, land improvement, design, and engineering related thereto. Capital improvements do not include routine and periodic maintenance expenditures or personnel, training, or other operating costs, but do include the following costs as they relate to the provision of public facilities:

(1) The cost of all labor and materials.

(2) The cost of all lands, right-of-way, property, rights, easements, and franchises acquired, including costs of acquisition or condemnation.

(3) The cost of all plans and specifications.

(4) The cost of new equipment.

(5) The cost of all construction, new drainage facilities in conjunction with new buildings and structures, and public facility site improvements.

(6) The cost of relocating utilities to accommodate new construction.

(7) The cost of planning and engineering.

(8) The cost of all land surveying and soils and materials testing.

(9) The cost of mitigating negative impacts of construction including natural resource impacts, environmental impacts, noise impacts, air quality impacts, and City impacts.

(10) The cost of any financing, including payment of principal and interest, necessary reserves and costs of issuance under any bonds or other indebtedness issued by the City relating to any of the costs set forth in this subsection 26-4(a).

(b) **"Capital improvement plan" or "CIP"** means a schedule of planned public facility capital improvements, which indicates the funding sources and estimated costs for each planned improvement

(c) **"City"** means the City of Avondale, an Arizona municipal corporation.

(d) **"Developer"** means a person, corporation, organization, or other legal entity undertaking development or the developer's authorized agent.

(e) **"Development"** means any construction or expansion of a building(s) or structure(s), or any changes in the use of any building(s) or structure(s) or land use that will generate additional impacts on the City's public facilities.

(f) **"Development fee"** means a fee imposed pursuant to this Chapter, in the amounts set forth in Article II of this Chapter.

(g) **"Development fee account"** means an account established by the City for the purpose of segregating development fee revenues collected for a particular public facility from all other City funds.

(h) **"Director"** means the director of the City Planning and Building Services Department or the director's designee.

(i) **"Encumbered"** means legally obligated or otherwise committed to use by appropriation or contract.

(j) **"Excess capacity"** means capital capacity in excess of the fair share capital capacity needed to mitigate the impacts of a particular development.

(k) **"Fair share capital capacity"** means that share or portion of public facility capital improvements that is reasonably attributable to or needed to serve a particular development.

(l) **"Fee payer"** means a person undertaking development who pays a development fee in accordance with the terms of this Chapter.

(m) **"New development"** means development for which a building or construction permit is applied for after the effective date of this Chapter.

(n) **"Non-commencement"** means the cancellation of construction activity making a material change in a structure, or the cancellation of any other development activity making a material change in the use or appearance of land.

(o) **"Offset"** means a credit, reimbursement, or waiver of development fees, given pursuant to the terms of this Chapter, as a result of the dedication, construction, or funding of an offset-eligible improvement.

(p) **"Offset-eligible improvement"** means a capital improvement, constructed, dedicated, or funded by a party other than the City, which is not a site-related capital improvement and which is of a type and function consistent with those upon which the respective technical report is based.

(q) **"Person"** means an individual, corporation, governmental agency, business trust, estate, trust, partnership, association, two or more persons having joint or common interest, or any other legal entity.

(r) **"Public facilities"** means water, sewer, library, parks and recreation, police, fire and emergency medical service ("EMS"), general government, sanitation, and transportation facilities and public services, for which development fees are collected pursuant to this Chapter, but does not include developer's site-related capital improvements.

(s) **"Public facilities capital costs"** means the costs of providing capital improvements for public facilities.

(t) **"Site-related capital improvements"** means a public facility capital improvement, whether on- or off-site, which is not of a type or function consistent with those upon which the technical report is based and which is necessary to mitigate impacts attributable solely to a particular development, including but not limited to, direct access improvements, turn lanes, median openings, frontage roads, and on-site water and sewer facilities.

(u) **"Technical report"** means the "Development Fee Study Prepared for City of Avondale," prepared by TischlerBise, and dated August 24, 2006, as may be further updated from time to time.

(v) **"Temporary uses"** means uses that are required in the construction phase of development or are uniquely seasonal in nature, including, but not limited to: contractor's project offices, project sales offices, seasonal sales of trees or farm produce, carnivals, and tent meetings.

26-5 Applicability of this Chapter.

(a) **Type of development affected.** Development fees shall be paid all by new development, in the amounts as set forth in Article II of this Chapter, unless the proposed development specifically is not subject to or is exempt from the terms of this Chapter, or has received an offset pursuant to section 26-7 of this Chapter.

(b) **Type of development not affected.** The following types of development shall not be subject to the terms of this Chapter:

(1) New development that does not create or increase the impacts on any public facility.

(2) The replacement of a destroyed or partially destroyed building or structure, with a new building or structure of the same size and intensity of use.

(3) The construction of agricultural structures.

(4) Temporary uses.

(c) **Exempt development.**

(1) Infill developments that qualify as an eligible projects, pursuant to Chapter 19, Article IV of this City Code, shall not be subject to the payment of development fees as otherwise required by this Chapter.

(2) In order to qualify for an exemption under this subsection, the applicant must file an application with the director and the exemption must be approved by the City Council.

(3) The fair share capital capacity directly related to an exemption granted under this subsection shall be funded from a revenue source other than development fees.

26-6 Collection of development fees.

(a) Development fees required by this Chapter shall be assessed against new development prior to the issuance of a building or construction permit.

(b) In addition to development fees, an administrative fee, in an amount determined by the City Council as part of the City's annual budget or by separate resolution, shall be paid at the time of building or construction permit application in order to offset the City's costs to administer development fees.

26-7 Offsets against development fees.

(a) **Eligibility and limitations.**

(1) Offsets shall be provided to a fee payer by the City for offset-eligible improvements, either:

(i) By the City Council, pursuant to subsection 26-7(b) below, for offset-eligible improvements which will address the fair share capital capacity of the development subject to the development fee; or

(ii) By the director, pursuant to subsection 26-7(c) below, where an applicant demonstrates that excess capacity was provided by a previously approved offset-eligible improvement.

(2) Except where an applicant provides excess capacity, no offset shall exceed the amount of development fees due for a given development for the same public facility category.

(3) Offsets shall be given for offset-eligible improvements required by the City as a condition of development approval.

(4) Any offsets requested for excess capacity will be approved at the sole discretion of the City Council, based on the City's capital needs, budget, general plan, and CIP.

(b) **Requirements and procedures for development fee offsets.** Applications for offsets must be made on a form provided by the Director for such purposes. The application must be accompanied by a proposed development agreement in a form acceptable to the City.

(1) **Requirements.** In order to be eligible for development fee offsets, the capital improvement proposed for dedication, construction, or funding:

(i) Must be an offset-eligible improvement to the same public facility category for which development fees are required; and

(ii) Must be either:

(A) Subject to a development agreement; or

(B) An offset-eligible improvement made as a condition of approval of development.

(2) **Calculation of the value of offset.**

(i) Except for offsets approved for excess capacity, the amount of any offset shall be calculated as the lower of the following:

(A) The amount of the development fee due pursuant to Article II of this Chapter.

(B) The actual verified costs of dedication or construction.

(ii) If the actual verified costs are used, the amount of the offset shall be calculated as follows:

(A) Actual cost of construction or equipment, as evidenced by receipts and other sufficient documentation provided by the developer of the capital improvement and verified by the Director.

(B) The fair market value of the land as determined by a certified property appraiser hired and paid for by the developer. If the City rejects the developer's appraisal, the City may hire and pay for a second appraiser to appraise the property. If either party rejects the second appraisal, a third appraisal may be performed by an appraiser chosen by the first and second appraisers, the costs of which are to be shared equally by the City and the developer. The third appraisal is binding on both parties. All appraisals must be consistent with generally-accepted appraisal techniques and the date of valuation must be the date of transfer to the City.

(3) **Transferability.** Offsets granted pursuant to this section, including credits against future development fee payments, may be transferred from the applicant to property owners within the original development without further approval by the City. However, in order to transfer offsets from the original development to another development, an application must be made pursuant to subsection 26-7(c) below.

(c) **Offsets to subsequent applicants.** Upon application, previously-approved offsets may be transferred to a subsequent development from the original development for which they were approved, pursuant to the provisions of this subsection 26-7(c).

(1) **Requirements.** In order for an offset to be transferred, the applicant must demonstrate that:

(i) The capital improvement for which the previously-approved offset was granted has sufficient unused capacity to mitigate the impacts of the proposed subsequent development.

(ii) The capital improvement for which the previously-approved offset was granted reduced the overall need for public facilities otherwise created by the proposed subsequent development.

(iii) The proposed subsequent development complies with all conditions of acceptance of the public facility provided pursuant to subsection 26-7(b) above, including time and geographic limitations for eligibility.

(iv) The capital improvement for which the previously-approved offset was granted was of the same public facility category as the development fee being assessed against the subsequent development.

(v) The applicant has secured from the developer of the capital improvement for which the previously-approved offset was granted a right to an allocation of capacity equal to the development fee owed by the applicant.

(2) **Procedure.**

(i) Applications for an offset pursuant to this subsection 26-7(c) shall be made on a form provided by the Director for such purposes. The application must be accompanied by evidence of a transfer of the offset granted pursuant to subsection 26-7(b) above.

(ii) Upon receipt of a complete application, the Director must review the application, as well as such other information and evidence as may be deemed relevant, and determine whether an offset is proper based on the provisions of this Chapter.

(iii) If the Director determines that an offset is appropriate, the Director shall so indicate on the appropriate form and the offset shall be given upon the calculation and collection of the required development fee at the time of issuance of a building or construction permit, as applicable.

26-8 Use of funds collected; development fee accounts.

(a) Development fees collected pursuant to this Chapter shall be used solely for the purpose of acquisition, expansion, and development of capital improvements to the public facilities for which they were collected, the need for which results from and the provision of which will result in a beneficial use to new development paying the fees. Allowable expenditures include, but are not limited to:

(1) Public facilities and public facilities capital costs.

(2) Payment of principal and interest, necessary reserves, and costs of issuance under any bonds or other indebtedness issued by the City to provide funds for acquisition, expansion and development of public facilities.

(3) Refunds granted pursuant to section 26-9 below.

(4) Updates to the Technical Report.

(5) Reimbursements to developers of offset-eligible improvements, pursuant to section 26-7 above.

(b) Development fees collected shall be spent or encumbered within six (6) years of the date of collection. Development fees shall be considered spent or encumbered in the order received by the City on a first-in, first-out basis.

(c) In order to ensure that development fee revenues are earmarked and spent solely for the capital improvements necessary to offset the impacts of new development, the following provisions apply:

(1) The City shall establish and maintain separate development fee accounts for each category for which a development fee is collected.

(2) Any amounts in a development fee account not immediately necessary for expenditure shall be invested in an interest-bearing account and all interest income derived from such investments shall be deposited in the development fee account.

(3) Development fee revenues for each category shall remain segregated from development fee accounts for other categories and from other City funds.

(4) Amounts withdrawn from a development fee account must be used solely in accordance with the provisions of this Chapter. Amounts on deposit in a development fee account shall not be used for any expenditure that would be classified as a maintenance, operations, or repair expense or to address existing deficiencies in public facilities.

26-9 Refunds.

(a) Upon application, development fees may be returned to the fee payer if the approved development is canceled due to non-commencement of construction or the building or construction permit expires or is revoked before the funds have been spent or encumbered. Refunds may be made in accordance with this section provided the present owner of the development files a petition for a refund within six (6) months from the date of non-commencement, expiration, or revocation.

(b) Upon application, in the event development fees are not spent or encumbered by the City within six (6) years from the date of collection, the City shall refund the amount of the fee, with accrued interest, to the owner of the land for which the fee was collected. For purposes of refunds, the owner of the land on which a development fee was paid shall be the owner of record at the time that the refund is paid.

(c) A refund application shall include the following information:

(1) Evidence that the development fee was paid for the property, the date of payment and the amount paid.

(2) A certified copy of the latest recorded deed for the property.

(3) Other information deemed by the Director to be necessary in order to determine compliance with the provisions of this section, based on the circumstances of the refund request.

(d) Within fifteen (15) business days of receipt of a refund application, the Director shall determine if it is complete. If the Director determines the refund application is not complete, the Director shall send a written statement specifying the deficiencies by mail to the person submitting the refund application. Unless the deficiencies are corrected, the Director shall take no further action on the refund application.

(e) If the Director determines the refund application is complete, the Director shall review it within thirty (30) business days, and shall approve the proposed refund if he or she determines that a refund is appropriate based on the criteria of this section 26-9.

(f) An administrative fee, in an amount determined by the City Council as part of the City's annual budget or by separate resolution, shall be paid at the time the refund application is submitted in order to offset the City's costs to process the application.

26-10 Updates; Annual reports.

(a) **Updates**. At least once every three (3) years, the City shall update the Technical Report, which provides the basis for the development fees imposed by this Chapter.

(b) **Annual review.**

(1) Within ninety (90) days following the end of each fiscal year, the City shall file a copy of an annual report with the city clerk. Copies of the annual report shall be made available to the public on request. The annual report may contain financial information that has not been audited. If the annual report is not filed with the city clerk as provided by this subsection, the City shall not collect development fees until the annual report is filed.

(2) The annual report must include the following:

(i) The amount assessed by the City for each type of development fee.

(ii) The balance of each development fee account maintained for each type of development fee assessed as of the beginning and end of the fiscal year.

(iii) The amount of interest or other earnings on the monies in each development fee account as of the end of the fiscal year.

(iv) The amount of development fee monies used to repay:

(A) Bonds issued by the City to pay the cost of a public facility capital improvement project that is the subject of a development fee assessment.

(B) Monies advanced by the City from funds other than development fee accounts established for development fees in order to pay the cost of a public facility capital improvement project that is the subject of a development fee assessment.

(v) The amount of development fee monies spent on each public facility capital improvement project that is the subject of a development fee assessment and the physical location of each public facility project.

(vi) The amount of development fee monies spent for each purpose other than a public facility capital improvement project that is the subject of a development fee assessment.

26-11 Appeals.

Determinations made by the Director pursuant to this Chapter may be appealed by the developer or applicant to the City Manager by filing a written request with the City Manager within ten (10) days of the time the Director's determination has been communicated to the developer or applicant by certified mail to the address provided, or delivered to the developer or applicant or otherwise received by the developer or applicant. The City Manager shall mail a notice of hearing to the developer, and the hearing shall be conducted at the time and place stated in such notice. The determination of the City Manager at the hearing shall be final.

26-12 – 26-19 (Reserved)

Article II – Development Fees by Public Facility Category

Sections

26-20 Water facilities development fee
26-21 Sewer facilities development fee
26-22 Library facilities development fee
26-23 Parks and recreation facilities development fee
26-24 Police facilities development fee
26-25 Fire and emergency medical services facilities development fee
26-26 General government facilities development fee
26-27 Sanitation facilities development fee
26-28 Transportation facilities development fee

26-20 Water facilities development fee.

(a) **Water facilities development fee schedule.** A water facilities development fee shall be assessed and collected from new residential and non-residential development, pursuant to all applicable provisions of this Chapter, in accordance with the following fee schedule:

Meter Size (inches)	Type	Capacity Ratio	Development Fee Amount
0.75	Displacement	1.00	$3,289
1.00	Displacement	1.70	$5,563
1.50	Displacement	3.30	$10,760
2.00	Displacement	5.30	$17,257
3.00	Compound	11.00	$35,773
4.00	Compound	17.00	$55,263

* For all other meter sizes, the City will use ratios that assume 33% of maximum capacity, indexed to 0.75" meter (see AWWA Manual 6). If a large-scale development submits an independent engineering analysis, the Water Development Fee may be based on the net capital cost per gallon of capacity and the annualized average day demand for the particular development.

(b) **Water facilities development fee account.** There is hereby established a water facilities development fee account into which all water facility development fees collected shall be deposited. Other than interest that accrues on the account, no other funds shall be maintained in the water facilities development fee account. Water facilities development fee revenues shall be spent only on capital improvements to water facilities as provided in Article I of this Chapter.

26-21 Sewer facilities development fee.

(a) **Sewer facilities development fee schedule.** A sewer facilities development fee shall be assessed and collected from new residential and non-residential development, pursuant to all applicable provisions of this Chapter, in accordance with the following fee schedule:

Meter Size (inches)	Type	Capacity Ratio	Development Fee Amount
0.75	Displacement	1.00	$3,254
1.00	Displacement	1.70	$5,532
1.50	Displacement	3.30	$10,739
2.00	Displacement	5.30	$17,247
3.00	Compound	11.00	$35,796
4.00	Compound	17.00	$55,322

(b) **Sewer facilities development fee account.** There is hereby established a sewer facilities development fee account into which all sewer facility development fees collected shall be deposited. Other than interest that accrues on the account, no other funds shall be maintained

in the sewer facilities development fee account. Sewer facilities development fee revenues shall be spent only on capital improvements to sewer facilities as provided in Article I of this Chapter.

26-22 Library facilities development fee.

(a) **Library facilities development fee schedule.** A library facilities development fee shall be assessed and collected from new residential development only, pursuant to all applicable provisions of this Chapter, in accordance with the following fee schedule:

Land Use	Impact Unit	Development Fee Amount
Residential		
Single Family	du	$264
Multi Family	du	$223
All Other Housing	du	$223

(b) **Library facilities development fee account.** There is hereby established a library facilities development fee account into which all library development fees collected shall be deposited. Other than interest that accrues on the account, no other funds shall be maintained in the library development fee account. Library development fee revenues shall be spent only on capital improvements to library facilities as provided in Article I of this Chapter.

26-23 Parks and recreation facilities development fee.

(a) **Parks and recreation facilities development fee schedule.** A parks and recreation facilities development fee shall be assessed and collected from new residential development only, pursuant to all applicable provisions of this Chapter, in accordance with the following fee schedule:

Land Use	Impact Unit	Development Fee Amount
Residential		
Single Family	du	$791
Multi Family	du	$669
All Other Housing	du	$669

(b) **Parks and recreation facilities development fee account.** There is hereby established a parks and recreation facilities development fee account into which all parks and recreation development fees collected shall be deposited. Other than interest that accrues on the account, no other funds shall be maintained in the parks and recreation development fee account. Parks and recreation development fee revenues shall be spent only on capital improvements to parks and recreation facilities as provided in Article I of this Chapter.

26-24 Police facilities development fee.

(a) **Police facilities development fee schedule.** A police facilities development fee shall be assessed and collected from new residential and non-residential development, pursuant to all applicable provisions of this Chapter, in accordance with the following fee schedule:

Land Use	Impact Unit	Development Fee Amount
Residential		
Single Family	du	$187
Multi Family	du	$158
All Other Housing	du	$158
Commercial/Shopping Center		
0-25,000	1,000 sf	$549
25,001-50,000	1,000 sf	$507
50,001-100,000	1,000 sf	$441
100,001-200,000	1,000 sf	$380
Greater than 200,000	1,000 sf	$324
Office/Institutional		
0-10,000	1,000 sf	$253
10,001-25,000	1,000 sf	$204
25,001-50,000	1,000 sf	$174
50,001-100,000	1,000 sf	$148
Greater than 100,000	1,000 sf	$126
Business Park	1,000 sf	$142
Light Industrial	1,000 sf	$77
Warehousing	1,000 sf	$42
Manufacturing	1,000 sf	$55
Hotel	room	$62

(b) **Police facilities development fee account.** There is hereby established a police facilities development fee account into which all police facilities development fees collected shall be deposited. Other than interest that accrues on the account, no other funds shall be maintained in the police facilities development fee account. Police development fee revenues shall be spent only on capital improvements to police facilities as provided in Article I of this Chapter.

26-25 Fire and emergency medical services facilities development fee.

(a) **Fire/EMS facilities development fee schedule.** A fire/EMS facilities development fee shall be assessed and collected from new residential and non-residential development, pursuant to all applicable provisions of this Ordinance, in accordance with the following fee schedule:

Land Use	Impact Unit	Development Fee Amount
Residential		
Single Family	du	$489
Multi Family	du	$413
All Other Housing	du	$413
Commercial/Shopping Center		
0-25,000	1,000 sf	$457
25,001-50,000	1,000 sf	$457
50,001-100,000	1,000 sf	$393
100,001-200,000	1,000 sf	$343
Greater than 200,000	1,000 sf	$275
Office/Institutional		
0-10,000	1,000 sf	$603
10,001-25,000	1,000 sf	$555
25,001-50,000	1,000 sf	$520
50,001-100,000	1,000 sf	$490
Greater than 100,000	1,000 sf	$460
Business Park	1,000 sf	$434
Light Industrial	1,000 sf	$317
Warehousing	1,000 sf	$176
Manufacturing	1,000 sf	$250
Hotel	room	$60

(b) **Fire/EMS facilities development fee account.** There is hereby established a fire/EMS facilities development fee account into which all fire/EMS facilities development fees collected shall be deposited. Other than interest that accrues on the account, no other funds shall be maintained in the fire/EMS facilities development fee account. Fire/EMS development fee revenues shall be spent only on capital improvements to fire/EMS facilities as provided in Article I of this Chapter.

26-26 General government facilities development fee

(a) **General government facilities development fee schedule.** A general government facilities development fee shall be assessed and collected from new residential and non-residential development, pursuant to all applicable provisions of this Chapter, in accordance with the following fee schedule:

Land Use	Impact Unit	Development Fee Amount
Residential		
Single Family	du	$585
Multi Family	du	$495
All Other Housing	du	$495
Commercial/Shopping Center		
0-25,000	1,000 sf	$547
25,001-50,000	1,000 sf	$547
50,001-100,000	1,000 sf	$470
100,001-200,000	1,000 sf	$411
Greater than 200,000	1,000 sf	$329
Office/Institutional		
0-10,000	1,000 sf	$721
10,001-25,000	1,000 sf	$664
25,001-50,000	1,000 sf	$623
50,001-100,000	1,000 sf	$587
Greater than 100,000	1,000 sf	$550
Business Park	1,000 sf	$519
Light Industrial	1,000 sf	$380
Warehousing	1,000 sf	$210
Manufacturing	1,000 sf	$299
Motel	room	$72

(b) **General government facilities development fee account.** There is hereby established a general government facilities development fee account into which all general government facilities development fees collected shall be deposited. Other than interest that accrues on the account, no other funds shall be maintained in the general government facilities development fee account. General government facilities development fee revenues shall be spent only on capital improvements to general government facilities as provided in Article I of this Chapter.

26-27 Sanitation facilities development fee.

(a) **Sanitation facilities development fee schedule.** A sanitation facilities development fee shall be assessed and collected from new single-family development only, pursuant to all applicable provisions of this Chapter, in accordance with the following fee schedule:

Land Use	Impact Unit	Development Fee Amount
Residential		
Single Family/ All other housing	du	$267

(b) **Sanitation facilities development fee account.** There is hereby established a sanitation facilities development fee account into which all sanitation facilities development fees collected shall be deposited. Other than interest that accrues on the account, no other funds shall be maintained in the sanitation facilities development fee account. Sanitation facilities development fee revenues shall be spent only on capital improvements to sanitation facilities as provided in Article I of this Chapter.

26-28 Transportation facilities development fee.

(a) **Transportation facilities development fee schedule.** A transportation facilities development fee shall be assessed and collected from new residential and non-residential development, pursuant to all applicable provisions of this Chapter, in accordance with the following fee schedule:

Land Use	Impact Unit	Development Fee Amount
Residential		
Single Family	du	$873
Multi Family	du	$604
All Other Housing	du	$604
Commercial/Shopping Center		
0-25,000	1,000 sf	$3,620
25,001-50,000	1,000 sf	$3,340
50,001-100,000	1,000 sf	$2,909
100,001-200,000	1,000 sf	$2,506
Greater than 200,000	1,000 sf	$2,135
Office/Institutional		
0-10,000	1,000 sf	$1,665
10,001-25,000	1,000 sf	$1,347
25,001-50,000	1,000 sf	$1,147
50,001-100,000	1,000 sf	$976
Greater than 100,000	1,000 sf	$831
Business Park	1,000 sf	$938
Light Industrial	1,000 sf	$512
Warehousing	1,000 sf	$364
Manufacturing	1,000 sf	$281
Hotel	room	$414

(b) **Transportation facilities development fee account.** There is hereby established a transportation development fee account into which all transportation development fees collected shall be deposited. Other than interest that accrues on the account, no other funds shall be maintained in the transportation development fee account. Transportation development fee revenues shall be spent only on capital improvements to transportation facilities as provided in Article I of this Chapter.

SECTION 4. That the Mayor, the City Manager, the City Clerk, and the City Attorney are hereby authorized and directed to execute all documents and take all steps necessary to carry out the purpose of this Ordinance.

SECTION 5. If any provision of this Ordinance is for any reason held by any court of competent jurisdiction to be unenforceable, such provision or portion thereof shall be deemed separate, distinct, and independent of all other provisions and such holding shall not affect the validity of the remaining portions of this Ordinance.

PASSED AND ADOPTED by the Council of the City of Avondale, December 18, 2006.

_____
Marie Lopez-Rogers, Mayor

ATTEST:

_____
Linda M. Farris, City Clerk

APPROVED AS TO FORM:

_____
Andrew J. McGuire, City Attorney

CITY COUNCIL REPORT

SUBJECT:
Executive Session

MEETING DATE:
December 18, 2006

TO: Mayor and Council

FROM: Linda Farris

THROUGH: Charlie McClendon, City Manager

ATTACHMENTS:

Click to download

No Attachments Available