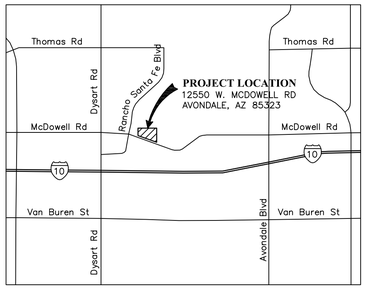

VICINITY MAP

RANCHO SANTA FE RESERVOIR MODIFICATIONS AND COATING
CITY PROJECT NO. PW17-010
SECTION 2, TOWNSHIP 1N & RANGE 1W
BID DOCUMENTS

SHEET INDEX

SHEET	
1	COVER SHEET
2	SITE PLAN, GENERAL SYMBOLS, MARKERS AND ABBREVIATIONS
3	RESERVOIR REMOVALS PLAN
4	RESERVOIR IMPROVEMENTS PLAN
5	RESERVOIR ROOF STRUCTURAL PLAN AND DETAILS
6	TYPICAL DETAILS

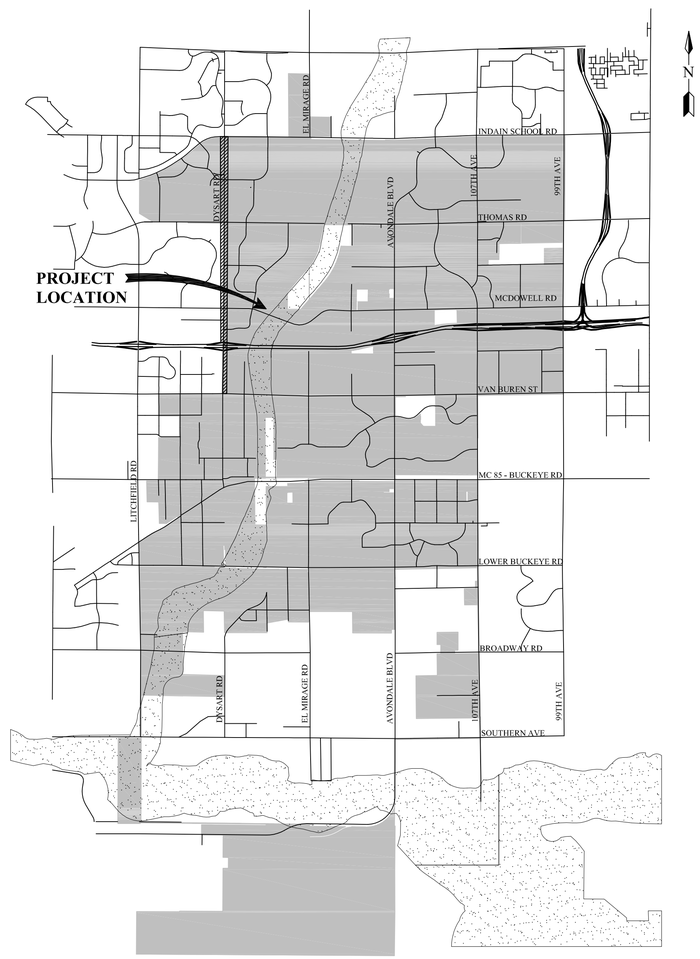

AREA MAP

CITY OF AVONDALE

MAYOR
KENNETH WEISE

VICE MAYOR
STEPHANIE KARLIN

COUNCIL MEMBERS
SANDI NIELSON
JIM MCDONALD
BRYAN KILGORE
DAVID IWANSKI
LORENZO SIERRA

CITY MANAGER
DAVID FITZHUGH

CITY CLERK
CARMEN MARTINEZ

ENGINEER
NCS ENGINEERS
RAMESH NARASIMHAN
202 E. EARLL DR., SUITE 110
PHOENIX, AZ 85012
PHONE: (602) 629 - 0206
FAX: (602) 629 - 0223

OWNER
CITY OF AVONDALE
CINDY BLACKMORE P.E., PUBLIC WORKS DIRECTOR
399 E. LOWER BUCKEYE ROAD
AVONDALE, ARIZONA 85323
PHONE: (623) 333-4460
FAX: (623) 333-0440

SURVEYOR
NOT APPLICABLE

BENCHMARK
NOT APPLICABLE

APPROVALS

Michael A. Smith — 09/06/2016
CITY PUBLIC WORKS DEPARTMENT — DATE

THE CITY APPROVES THESE PLANS FOR CONCEPT ONLY AND ACCEPTS NO LIABILITY FOR ERRORS OR OMISSIONS

Approval Not Needed
MARICOPA COUNTY ENVIRONMENTAL SERVICES — DATE
1101 N CENTRAL #150
PHOENIX, AZ 85334

"AS-BUILT CERTIFICATION"

I HEREBY CERTIFY THAT THE "AS-BUILT" INFORMATION SHOWN HEREON WAS OBTAINED UNDER MY DIRECT SUPERVISION AND IS CORRECT AND COMPLETE TO THE BEST OF MY KNOWLEDGE AND BELIEF

REGISTERED ENGINEER

REGISTRATION NUMBER — DATE

COMPANY NAME:

ADDRESS:

PHONE NUMBER:

Call at least two full working days before you begin excavation.
ARIZONA 811
Arizona Blue Stake, Inc.
Dial 8-1-1 or 1-800-STAKE-IT (782-5348)
In Maricopa County: (602) 263-1100

NOTE:
ALL CONSTRUCTION SHALL BE IN ACCORDANCE WITH THE MOST RECENT EDITION OF THE CITY OF AVONDALE'S SUPPLEMENT TO M.A.G. SPECIFICATIONS AND STANDARD DETAILS CURRENTLY ON FILE AND AVAILABLE AT THE CITY OF AVONDALE'S ENGINEERING DEPARTMENT OR ONLINE AT THE CITY OF AVONDALE'S WEBSITE.

REVISED
DRAWING SCALE(S):

NCS ENGINEERS
202 E. EARLL DR., SUITE 110
PHOENIX, AZ 85012
(602) 629-0206

PROJECT TYPE: CAPITAL IMPROVEMENTS PROJECT
PROJECT NAME: RANCHO SANTA FE RESERVOIR MODIFICATIONS AND COATING
PROJECT NUMBER: PW17-010
SHEET NAME: COVER SHEET

SEALED
Registered Professional Engineer (Civil)
CERTIFICATE NO. 28112
RAMESH NARASIMHAN
Date Signed 09/02/16
ARIZONA, U.S.A.
EXP. DATE: 09/30/18

ORIGINAL PLAN DATE
SEPTEMBER 2016
LATEST REVISION DATE

SHEET NUMBER
1 OF 6
PROJECT NUMBER
PW17-010

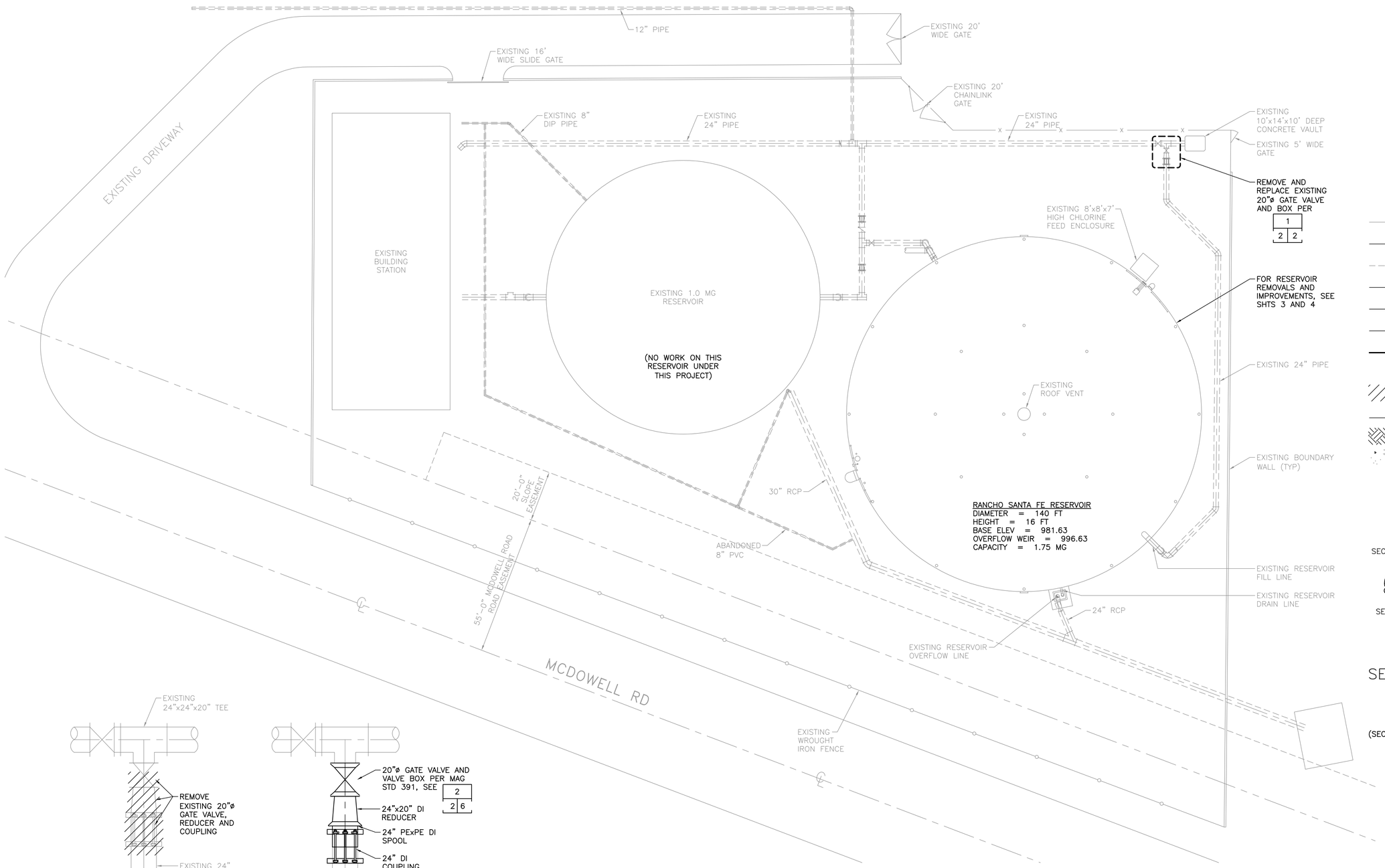

SITE AND YARD PIPING PLAN

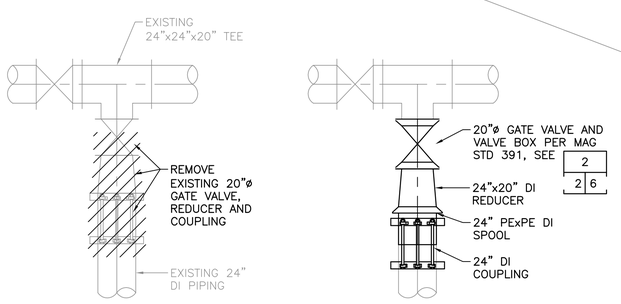

VALVE REMOVAL PLAN

VALVE REPLACEMENT PLAN

DETAIL 1 2 2
SCALE: 1"=1'-0"

NOTES:
1. FOR BIDDING PURPOSES, CONSIDER THE EXISTING VALVE IS 5 FEET DEEP, AND EXISTING WATER MAIN PIPE IS DI PIPE.
2. EXCAVATION LIMITS SHALL BE DETERMINED BY THE CONTRACTOR.
3. CITY WILL ISOLATE THE LINE FOR 8 HOURS TO ACCOMMODATE THE GATE VALVE REMOVAL AND REPLACEMENT.

N

0 20 40
SCALE: 1" = 20'-0"

GENERAL SYMBOLS

- OBJECT LINE, EXISTING
- OBJECT LINES, NEW OR RELOCATED
- BELOW GROUND
- CENTER LINE
- HIDDEN LINE
- SURFACE BREAK LINE
- BASE LINE OR DATUM LINE
- ø DIAMETER OR ROUND
- EXISTING OBJECT TO BE REMOVED
- WATER SURFACE
- EARTH
- CONCRETE

MARKERS

CUT FND — SECTION INDICATOR

CUT FND — DETAIL INDICATOR

CUT FND — SECTION CUT

DETAIL # CUT FND — SCALE, DETAIL TITLE

SECTION # CUT FND — SECTION TITLE, SCALE

TYP # — TYPICAL DETAIL

(SECTIONS ARE LETTERED, DETAILS ARE NUMBERED)

ABBREVIATIONS

DI	DUCTILE IRON
PE	PLAIN END
SHT(S)	SHEET(S)

GENERAL NOTES:
1. ALL NEW WORK IS SHOWN IN BOLD.

INFORMATION ON THIS SHEET IS FOR GENERAL REFERENCE PURPOSES. INFORMATION DOES NOT REPRESENT A FIELD SURVEY.

REVISED | DRAWING SCALE(S)

NCS ENGINEERS
202 E. EARLL DR., SUITE 110
PHOENIX, AZ 85012
(602) 629-0206
NCS Engineers

PROJECT TYPE: CAPITAL IMPROVEMENTS PROJECT
PROJECT NAME: RANCHO SANTA FE RESERVOIR MODIFICATIONS AND COATING
PROJECT NUMBER: PW17-010
SHEET NAME: SITE PLAN, GENERAL SYMBOLS, MARKERS AND ABBREVIATIONS

SEALED
Registered Professional Engineer (Civil) CERTIFICATE NO. 28112 RAMESH NARASIMHAN Date Signed 07/02/18 ARIZONA, U.S.A.
EXP. DATE: 09/30/18

ORIGINAL PLAN DATE: SEPTEMBER 2016
LATEST REVISION DATE:

SHEET NUMBER 2 OF 6
PROJECT NUMBER PW17-010

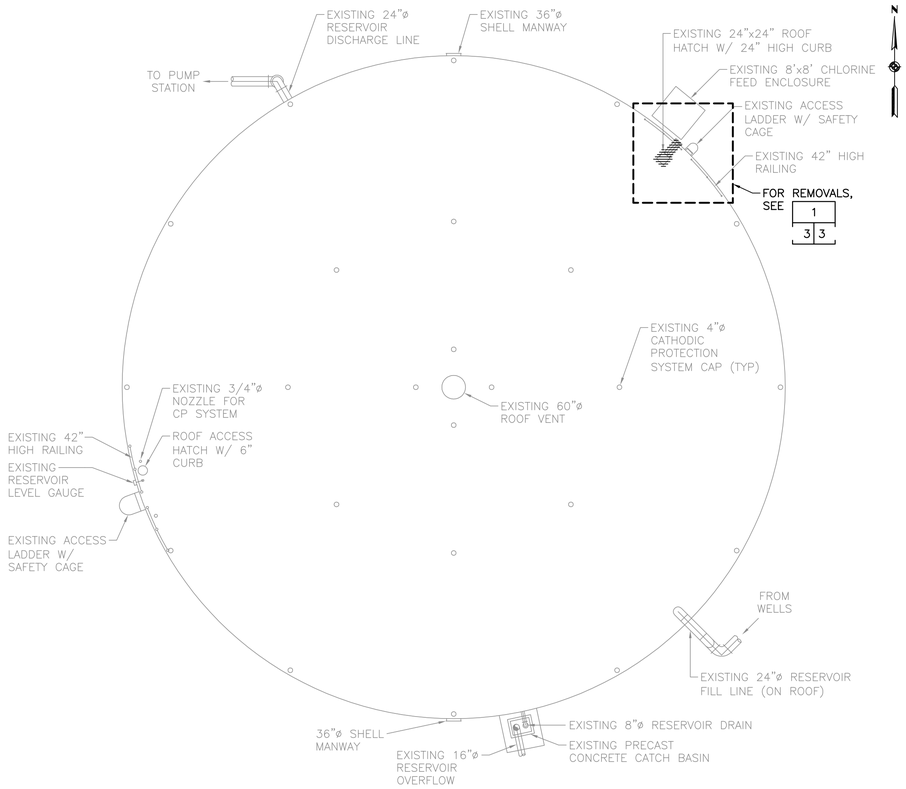

RESERVOIR REMOVALS ROOF PLAN

SCALE: 1/16"=1'-0"

0' 16' 32'

SCALE: 1/16"=1'-0"

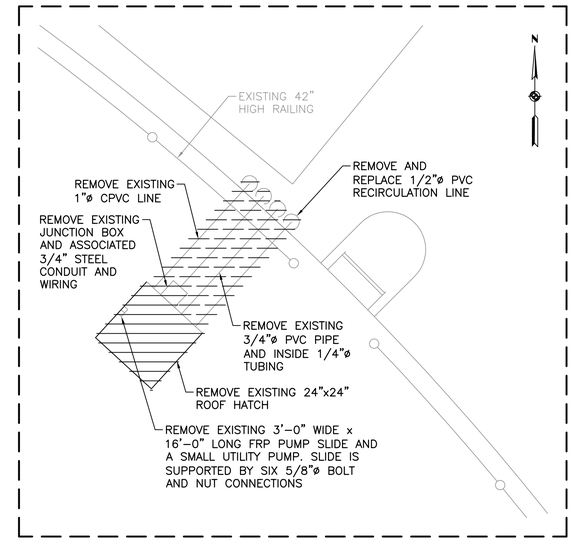

DETAIL 1 / 3 3

SCALE: 1/2"=1'-0"

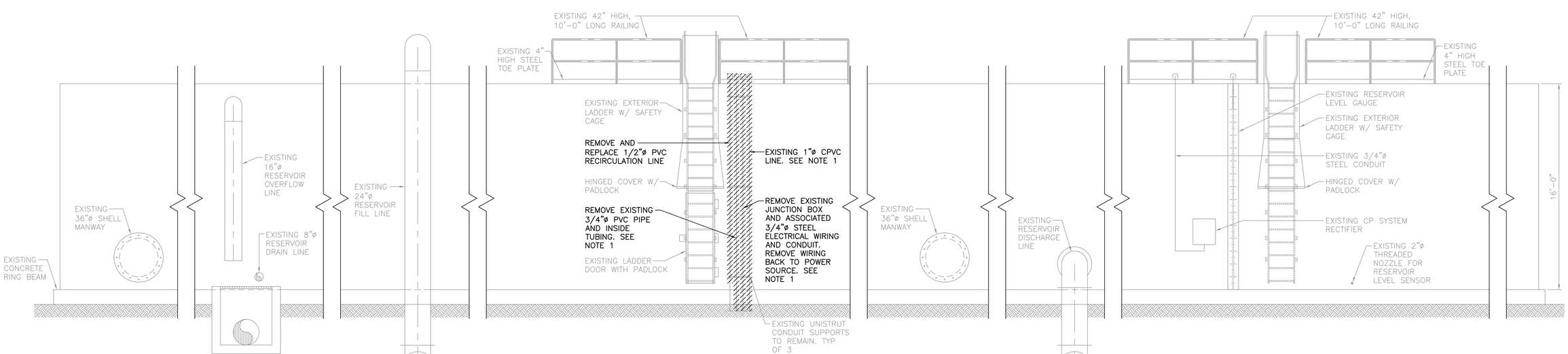

RESERVOIR REMOVALS ELEVATION

SCALE: 1/4"=1'-0"

NOTES:

1. REMOVE CONDUIT OR PIPING TO 6" BELOW GRADE AND BACKFILL.

REVISED

DRAWING SCALED

NCS ENGINEERS
202 E. EARLL DR., SUITE 110
PHOENIX, AZ 85012
(602) 629-0206

NCS Engineers

PROJECT TYPE: CAPITAL IMPROVEMENTS PROJECT

PROJECT NAME: RANCHO SANTA FE RESERVOIR MODIFICATIONS AND COATING

SHEET NAME: RESERVOIR REMOVALS PLAN

PROJECT NUMBER: PW17-010

SEALED

Registered Professional Engineer (Civil) CERTIFICATE NO. 28112 RAMESH NARASIMHAN Date Signed 07/02/18 ARIZONA, U.S.A.

EXP. DATE: 09/30/18

ORIGINAL PLAN DATE

SEPTEMBER 2016

LATEST REVISION DATE

SHEET NUMBER 3 OF 6

PROJECT NUMBER PW17-010

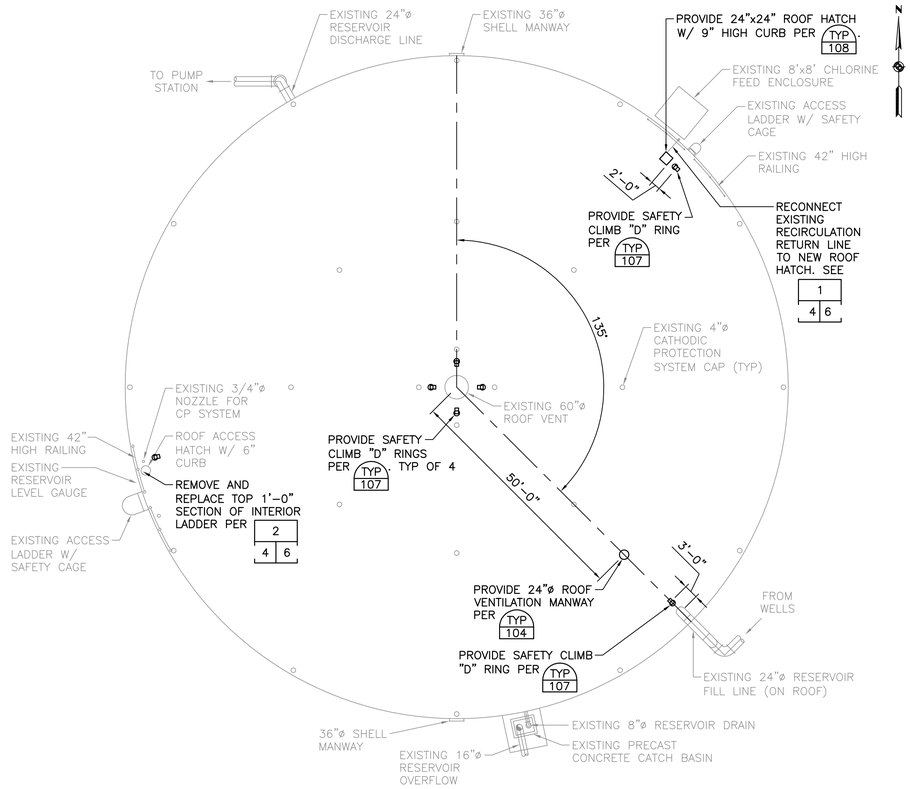

RESERVOIR IMPROVEMENTS ROOF PLAN

SCALE: 1/16"=1'-0"

0' 16' 32'

SCALE: 1/16"=1'-0"

CONSTRUCTION NOTES:

1. REMOVE AND REINSTALL CONDUIT(S) AND PIPING ON RESERVOIR ROOF AND SHELL TO ACCOMMODATE COATING.
2. REMOVE AND REPLACE EXISTING SHELL MANWAY GASKETS WITH NEW 36"ø SHELL FLANGE MANWAY GASKETS.
3. PERFORM RESERVOIR INTERIOR SURFACE PREPARATION AND COATING PER SPECIFICATION SECTION 09800.
4. PERFORM RESERVOIR EXTERIOR SURFACE PREPARATION AND OVERCOATING PER SPECIFICATION SECTION 09800.
5. REMOVE EXISTING COATING ON APPROXIMATELY 3" WIDE AREA AROUND THE EXISTING UNISTRUT SUPPORTS BY POWER TOOL CLEANING TO BARE METAL AND RECOAT PER SPECIFICATION SECTION 09800, SYSTEM NO. 3.
6. REMOVE RUSTING ON THE OVERFLOW PIPE EDGE BY POWER TOOL CLEANING AND RECOAT PER SPECIFICATION SECTION 09800, SYSTEM NO. 3. REMOVE AND REINSTALL SCREEN TO ACCOMMODATE CLEANING AND COATING.
7. SEE SPECIFICATIONS FOR EXISTING SYSTEMS TO BE REMOVED AND REINSTALLED BY CITY TO ACCOMMODATE WORK.
8. PIPING AND CONDUIT LOCATED ON RESERVOIR SHALL RECEIVE SURFACE PREPARATION AND COATING PER SPECIFICATION SECTION 09800.
9. FOR NUMBER OF RUST SPOTS TO RECEIVE SURFACE PREPARATION AND COATING, SEE COATING SPECIFICATION SECTION 09800.

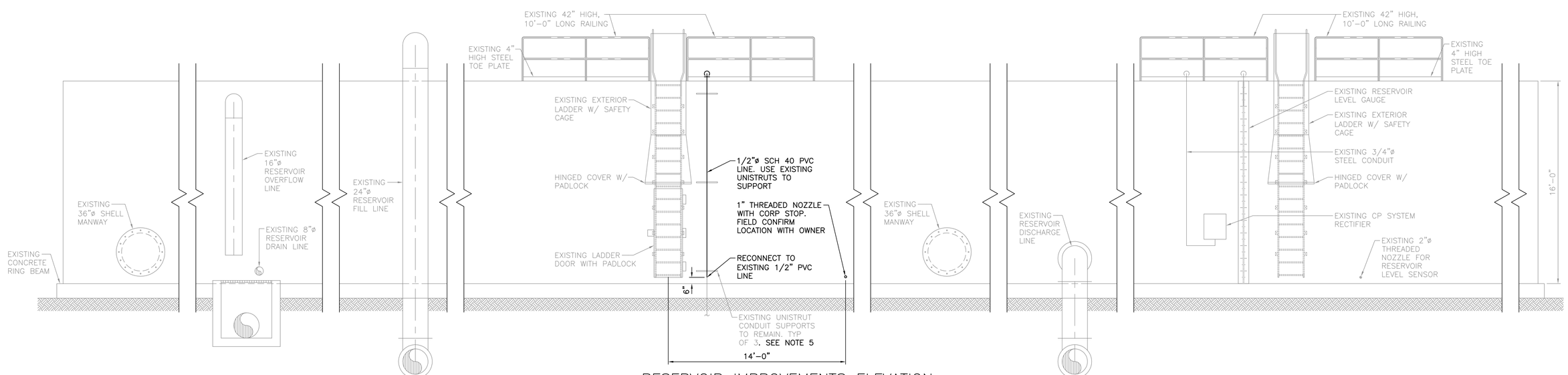

RESERVOIR IMPROVEMENTS ELEVATION

SCALE: 1/4"=1'-0"

REVISED

DRAWING SCALED

NCS ENGINEERS
202 E. EARLL DR., SUITE 110
PHOENIX, AZ 85012
(602) 629-0206
NCS Engineers

PROJECT TYPE: CAPITAL IMPROVEMENTS PROJECT

PROJECT NAME: RANCHO SANTA FE RESERVOIR MODIFICATIONS AND COATING

SHEET NAME: RESERVOIR IMPROVEMENTS PLAN

PROJECT NUMBER: PW17-010

SEALED

Registered Professional Engineer (Civil) CERTIFICATE NO. 28112 RAMESH NARASIMHAN Date Signed 07/02/18 ARIZONA, U.S.A.

EXP. DATE: 09/30/18

ORIGINAL PLAN DATE

SEPTEMBER 2016

LATEST REVISION DATE

SHEET NUMBER

4 OF 6

PROJECT NUMBER

PW17-010

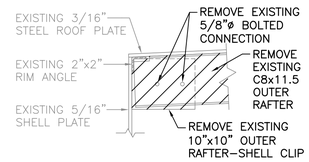

OUTER RAFTER-SHELL CONNECTION REMOVAL DETAIL 1 | 5 5

SCALE: NTS

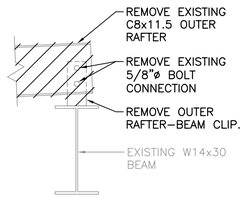

OUTER RAFTER-BEAM CONNECTION REMOVAL DETAIL 3 | 5 5

SCALE: 1"=1'-0"

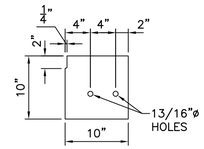

10"x10"x1/4" THICK OUTER RAFTER-SHELL CLIP 5 | 5 5

SCALE: 1"=1'-0"

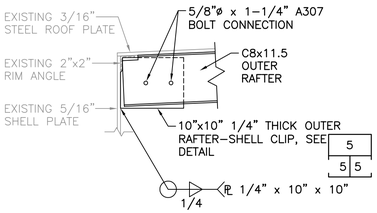

OUTER RAFTER-SHELL CONNECTION REPLACEMENT DETAIL 2 | 5 5

SCALE: NTS

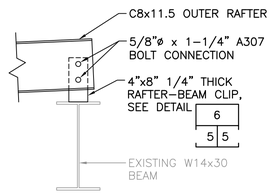

OUTER RAFTER-BEAM CONNECTION REPLACEMENT DETAIL 4 | 5 5

SCALE: 1"=1'-0"

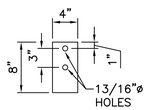

4"x8"x1/4" THICK OUTER RAFTER-BEAM CLIP 6 | 5 5

SCALE: 1"=1'-0"

OUTER RAFTER REMOVAL AND REPLACEMENT DETAILS (CONTINGENCY ITEM NO. 1)

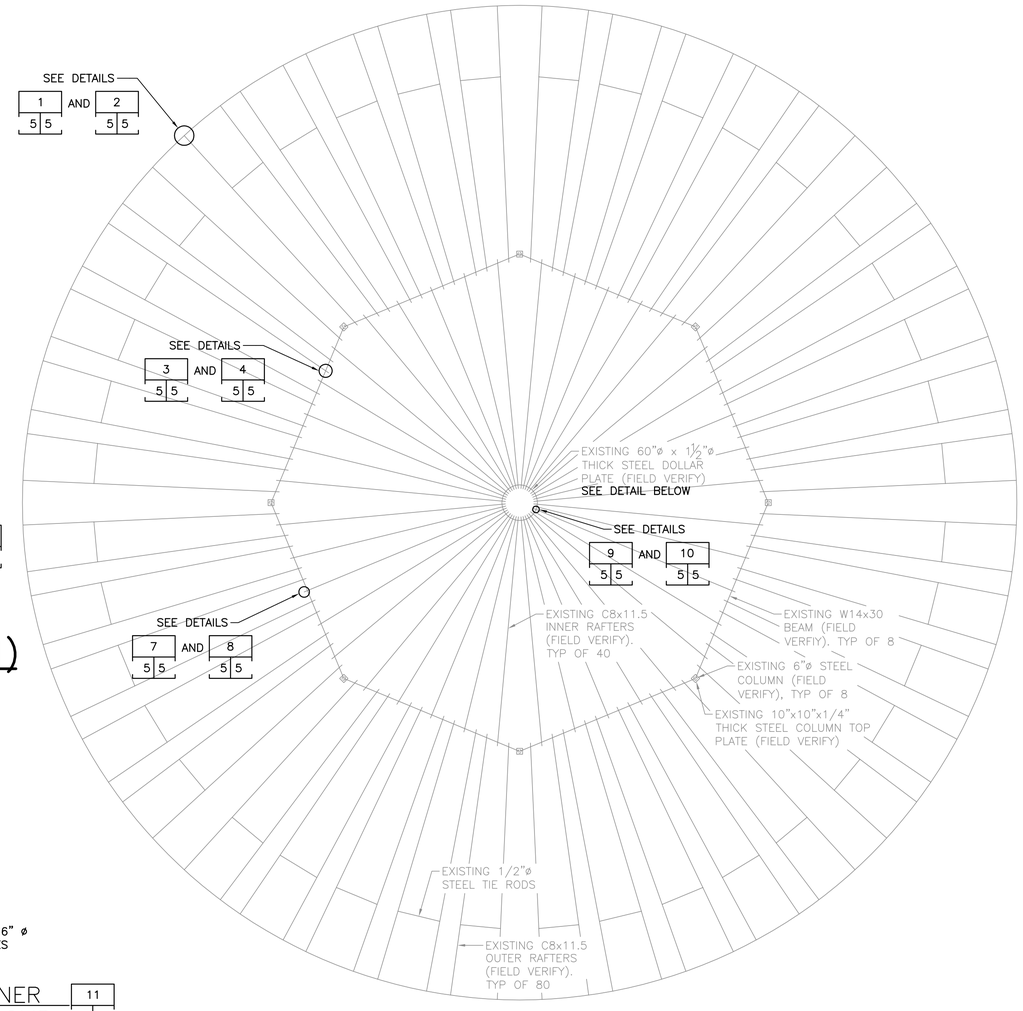

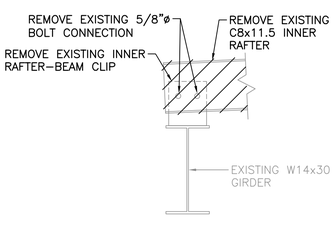

INNER RAFTER-BEAM CONNECTION REMOVAL DETAIL 7 | 5 5

SCALE: 1"=1'-0"

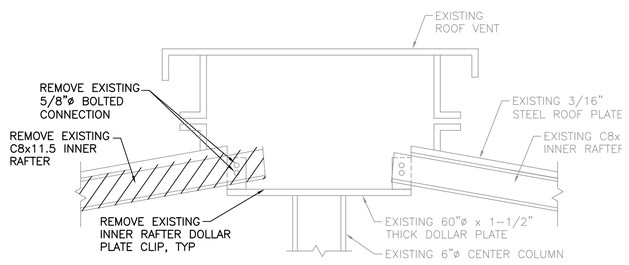

INNER RAFTER-DOLLAR PLATE CONNECTION REMOVAL DETAIL 9 | 5 5

SCALE: NTS

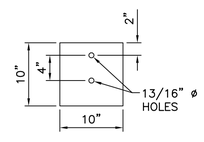

10"x10"x1/4" THICK INNER RAFTER-DOLLAR PLATE CLIP 11 | 5 5

SCALE: 1"=1'-0"

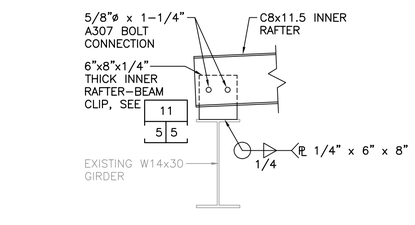

INNER RAFTER-BEAM CONNECTION REPLACEMENT DETAIL 8 | 5 5

SCALE: 1"=1'-0"

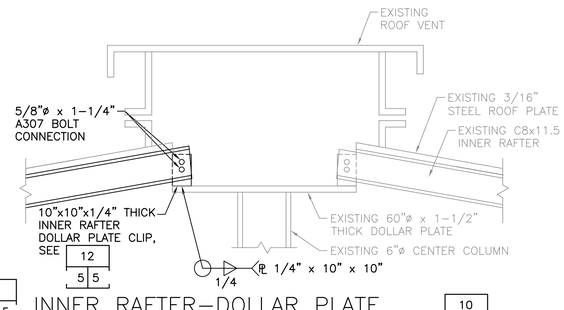

INNER RAFTER-DOLLAR PLATE CONNECTION REPLACEMENT DETAIL 10 | 5 5

SCALE: NTS

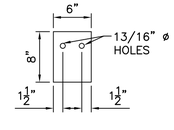

6"x8"x1/4" THICK INNER RAFTER-BEAM CLIP 12 | 5 5

SCALE: 1"=1'-0"

INNER RAFTER REMOVAL AND REPLACEMENT DETAILS (CONTINGENCY ITEM NO. 2)

RESERVOIR STRUCTURAL PLAN

SCALE: 3/32"=1'-0"

NOTES:

1. THE RESERVOIR STRUCTURAL PLAN SHOWS ONLY THE BEAM AND RAFTERS CONFIGURATION. ACTUAL INNER AND OUTER RAFTERS AND TIE RODS THAT NEED TO BE REPLACED, WILL BE FIELD DETERMINED BY THE ENGINEER.
2. FOR NEW INNER AND OUTER RAFTERS AND TIE RODS COATING, SEE SPECIFICATIONS SECTIONS 09800 AND 13208.
3. CONTRACTOR SHALL FIELD VERIFY INNER RAFTER, OUTER RAFTER, TIE RODS, RAFTER CLIPS, DOLLAR PLATE, COLUMN TOP PLATES, AND COLUMNS' SIZES. SIZES SHOWN ARE FOR BIDDING PURPOSES ONLY.

THE DETAILS SHOWN ON THIS SHEET WERE DEVELOPED FOR BIDDING PURPOSES BASED ON BEST AVAILABLE INFORMATION AT THE TIME OF DESIGN. ADJUSTMENTS AND MODIFICATIONS TO THESE DETAILS MAY OCCUR BASED ON ACTUAL FIELD CONDITIONS.

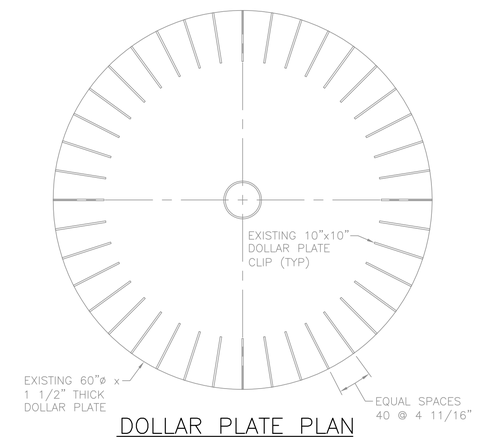

DOLLAR PLATE PLAN

SCALE: 1"=1'-0"

NCS ENGINEERS
202 E. EARLL DR., SUITE 110
PHOENIX, AZ 85012
(602) 629-0206

PROJECT TYPE: CAPITAL IMPROVEMENTS PROJECT

PROJECT NAME: RANCHO SANTA FE RESERVOIR MODIFICATIONS AND COATING

PROJECT NUMBER: PW17-010

SHEET NAME: RESERVOIR STRUCTURAL ROOF PLAN AND DETAILS

SEALED

Registered Professional Engineer (Civil) CERTIFICATE NO. 28112 RAMESH NARASIMHAN Date Signed 09/02/16 ARIZONA, U.S.A.

EXP. DATE: 09/30/18

ORIGINAL PLAN DATE: SEPTEMBER 2016

LATEST REVISION DATE:

SHEET NUMBER 5 OF 6

PROJECT NUMBER PW17-010

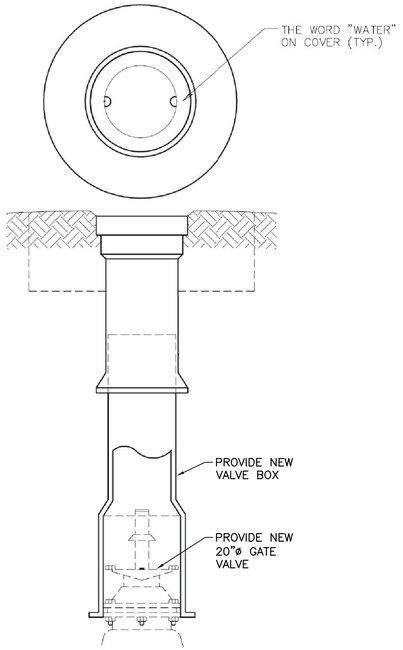

TYPE 'C'

GATE VALVE AND VALVE BOX INSTALLATION DETAIL (2 / 2 6)

NTS

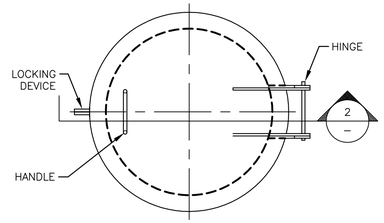

1 PLAN VIEW

NOTES:

1. METHOD AND MATERIALS OF CONSTRUCTION ARE AT CONTRACTOR'S OPTION, BUT MUST MEET REQUIREMENTS OF LATEST EDITION OF AWWA.
2. ALL WELDING TO BE DONE WITH E70XX ELECTRODES.
3. ALL WELDING SHOWN IS TO BE DONE BY CONTRACTOR.
4. PROVIDE PADLOCK AND LOCK VENTILATION MANWAY AFTER CONSTRUCTION.

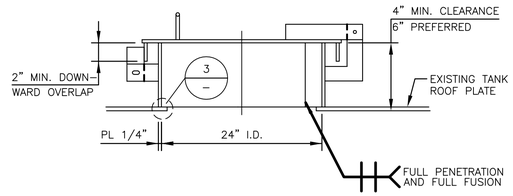

2 SECTIONAL ELEVATION

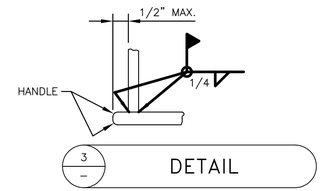

DETAIL

24"ø VENTILATION ROOF MANWAY (TYP 104)

SCALE: NTS

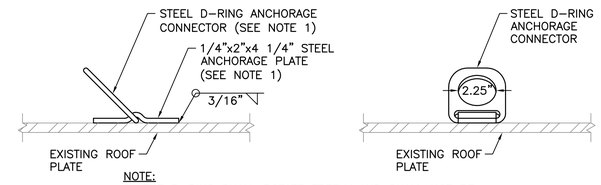

NOTE:

1. THE D-RING SHALL ROTATE FREELY AND SHALL NOT BE WELDED TO THE RESERVOIR OR ANCHORAGE PLATE.

SAFETY "D" RING DETAIL (TYP 107)

SCALE: NTS

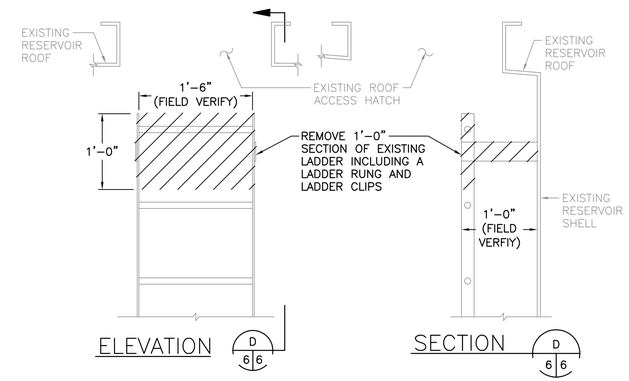

ELEVATION (D / 6 6)

SECTION (D / 6 6)

EXISTING INTERIOR LADDER SECTION REMOVAL DETAIL

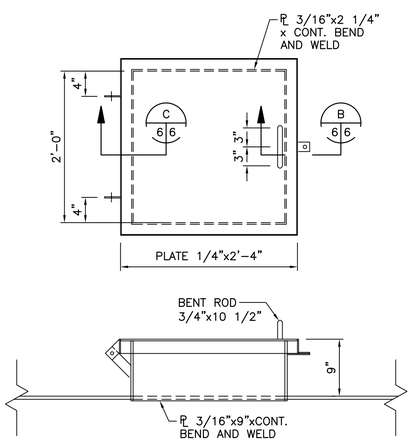

24"X24" ROOF MANWAY (TYP 108)

SCALE: 1"=1'-0"

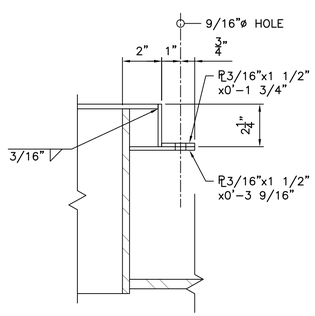

SECTION (B / 6 6)

SCALE: 3"=1'-0"

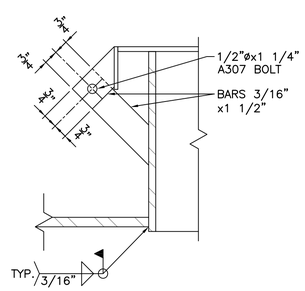

SECTION (C / 6 6)

SCALE: 3"=1'-0"

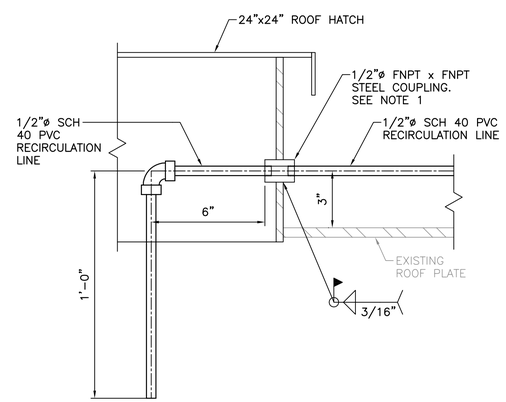

RECIRCULATION LINE CONNECTION DETAIL (1 / 4 6)

SCALE: 3"=1'-0"

NOTES:

1. PROVIDE 1 1/4"ø HOLE IN ROOF HATCH CURB TO ACCOMMODATE 1/2"ø STEEL COUPLING.

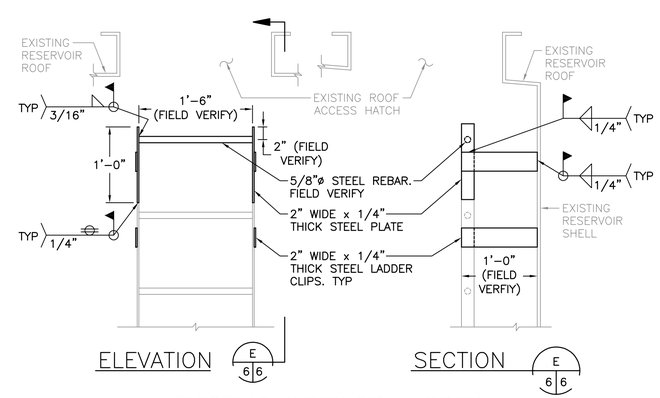

ELEVATION (E / 6 6)

SECTION (E / 6 6)

EXISTING INTERIOR LADDER SECTION REPLACEMENT DETAIL

EXISTING INTERIOR LADDER SECTION REMOVAL AND REPLACEMENT DETAIL (2 / 4 6)

SCALE: NTS

REVISED | DRAWING CHECKED

NCS ENGINEERS
202 E. EARLL DR., SUITE 110
PHOENIX, AZ 85012
(602) 629-0206

NCS Engineers

PROJECT TYPE: CAPITAL IMPROVEMENTS PROJECT

PROJECT NAME: RANCHO SANTA FE RESERVOIR MODIFICATIONS AND COATING

SHEET NAME: TYPICAL DETAILS

PROJECT NUMBER: PW17-010

SEALED

Registered Professional Engineer (Civil) CERTIFICATE NO. 38112 RAMESH NARASIMHAN Date Signed 09/04/2018 ARIZONA, U.S.A.

EXP. DATE: 09/30/18

ORIGINAL PLAN DATE: SEPTEMBER 2016

LATEST REVISION DATE:

SHEET NUMBER 6 OF 6

PROJECT NUMBER PW17-010