PROJECT TITLE

STORM WATER MANAGEMENT PLAN

(Location, Street Address/Cross Roads)

Section, Township & Range

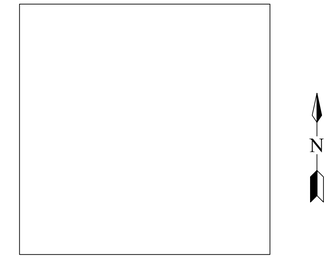

VICINITY MAP

STORM WATER MANAGEMENT PLAN GENERAL NOTES

1. Approval of this storm water management plan (SWMP) plan does not constitute an approval of permanent road or drainage design (e.g. size and location of roads, pipes, restrictors, channels, retention facilities, utilities, etc.).
2. The implementation of these SWM plans and the construction, maintenance, replacement, and upgrading of these SWM facilities is the responsibility of the applicant/contractor until all construction is completed and approved and vegetation/landscpaing is established..
3. If the project is phase the boundaries of the current phase clearing limits shall be shown on this plan and shall be defined in the field prior to construction. Future phases shall be protected and shown on this plan.
4. The SWM facilities shown on this plan must be constructed in conjunction with all cleaning and grading activities, and in such a manner as to insure that sediment and sediment laden water do not enter the drainage system, roadways, or violate applicable water standards.
5. The SWM facilities shown on this plan are the minimum requirements for anticipated site conditions. During the construction period, these SWM facilities shall be upgraded as needed for unexpected storm events and to ensure that sediment and sediment laden water do not leave the site.
6. The SWM facilities shall be inspected daily by the applicant/contractor and maintained as necessary to ensure their continued functioning.
7. The SWM facilities on inactive sites shall be inspected and maintained a minimum of once a month or within 24 hours following a major storm event.
8. At no time shall more than one foot of sediment be allowed to accumulate within a trapped catch basin. All catch basins and conveyance lines shall be cleaned prior to paving. The cleaning operation shall not flush sediment laden water into the downstream system.
9. Stabilized construction entrances shall be installed at the beginning of construction and maintained for the duration of the project. Additional measures may be required to ensure that all paved areas are kept clean for the duration of the project.
10. A stabilized construction entrance consisting of a minimum of six (6) inches of one (1) inches to three (3) inches diameter, washed, well-graded gravel or crushed rock shall be installed per MCFCD BMP-39; all construction traffic shall enter and exit through this entrance. The stabilized construction entrance shall be re-graded or replaced when it becomes saturated or matted with site soils. The paved street adjacent to the site entrance shall be swept on a regular basis to remove any excess mud or dirt tracked out from the site. The cleaning operation shall not flush sediment laden water into the downstream storm water system.
11. Any disturbed areas where construction has permanently or temporarily ceased shall be stabilized to prevent erosion. An acceptable stabilization method is hydroseeding. Areas which will be redisturbed within 14 days do not have to be stabilized.
12. All storm drain inlets shall be equipped with approved inlet protection per MCFCD BMP-72 or BMP-73 or the wattle with geotextile fabric to prevent sedimentation from entering storm drain pipes.
13. All storm drain outlets shall have erosion protection velocity-disapaters or energy dissipaters per MCFCD BMP-51 installed immediately after the installation of storm drain pipe to prevent erosion in outlet areas.
14. Any sediment which accumulates in the catch basins shall be removed from the catch basins as necessary to maintain a minimum of 75% of the required capacity of the basin during construction and 100% thereafter.
15. A copy of the contractor's NOI and SWMP must be submitted with these plans.
16. The contract shall submit a copy of the NOI to the City at the termination of the project construction.

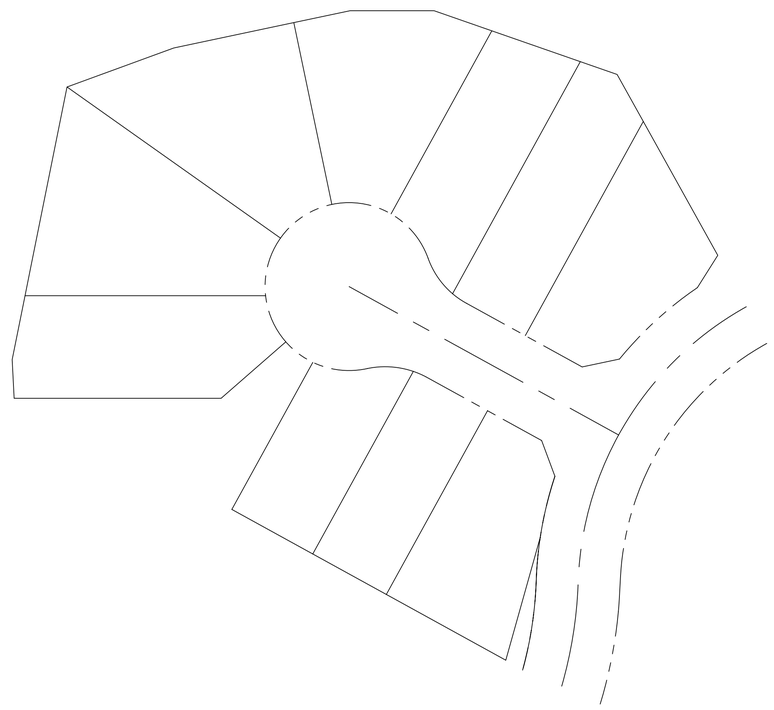

KEY MAP
NTS

OWNER

Company
Contact Person
Address
City, State Zip
Phone:
Fax:

ENGINEER

Company
Contact Person
Address
City, State Zip
Phone:
Fax:

SHEET INDEX:

Sheet 1 – Cover Sheet
Sheet 2 – Erosion & Sediment Control Plan
Sheet 3-5 – BMP Details

APPROVALS

DEVELOPMENT SERVICES DEPARTMENT DATE

THE CITY APPROVES THESE PLANS FOR CONCEPT ONLY AND ACCEPTS NO LIABILITY FOR ERRORS OR OMISSIONS.

NOTE:
ALL CONSTRUCTION SHALL BE IN ACCORDANCE WITH THE CITY OF AVONDALE CONSTRUCTION SPECIFICATIONS CURRENTLY ON FILE AND AVAILABLE AT THE CITY OF AVONDALE ENGINEERING DEPARTMENT

Two working days before you dig, CALL FOR THE BLUE STAKES 263-1100 800-782-5348 Blue Stake Center

DRAWING SCALED

(FIRM INFORMATION HERE)

DEVELOPER/OWNER NAME

PROJECT NAME NAME

SEALED

PLAN TYPE Storm Water Management Plan

ORIGINAL PLAN DATE

LATEST REVISION DATE

SHEET NUMBER 1 OF 5

PROJECT NUMBER XXXX

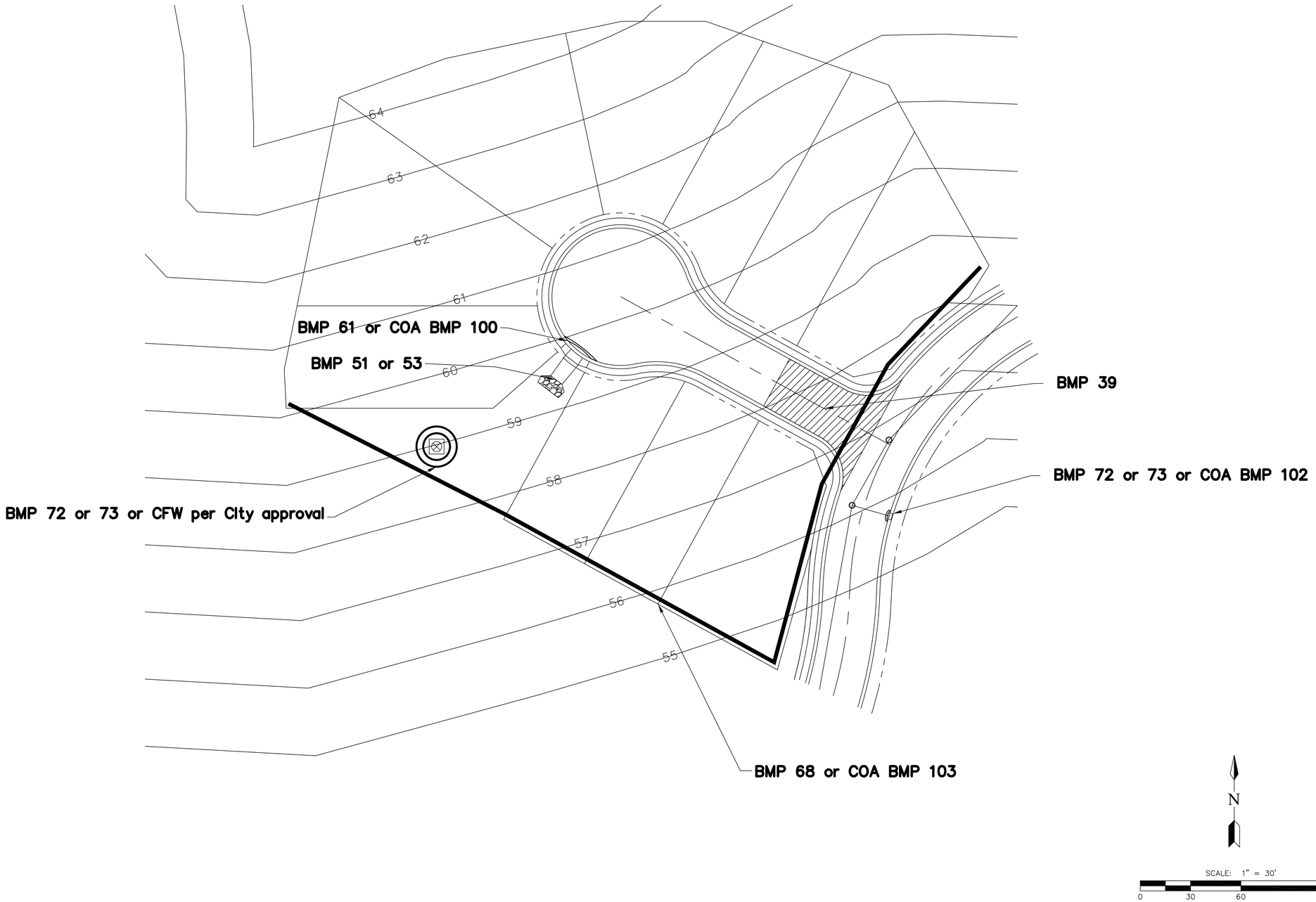

(FIRM INFORMATION HERE)

DEVELOPER/OWNER
NAME

PROJECT NAME
NAME

PLAN TYPE
Storm Water Management Plan

SEALED

ORIGINAL PLAN DATE

LATEST REVISION DATE

SHEET NUMBER
2 OF 5

PROJECT NUMBER
XXXX

Two working days before you dig,
CALL FOR THE BLUE STAKES
263-1100
800-782-5348
Blue Stake Center

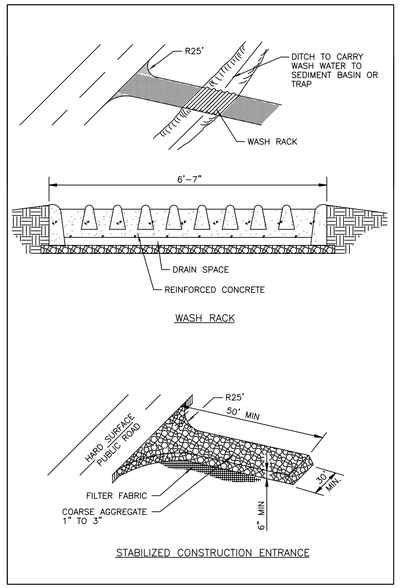

BMP-39

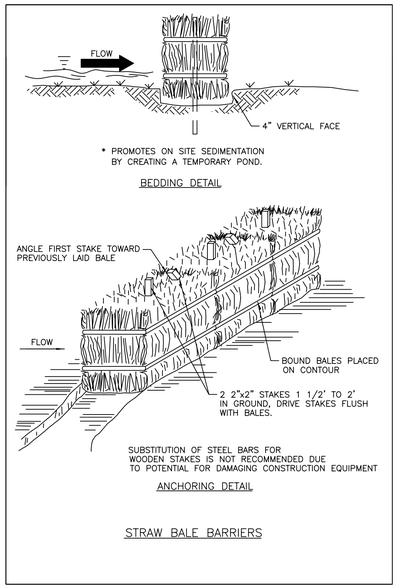

BMP-61

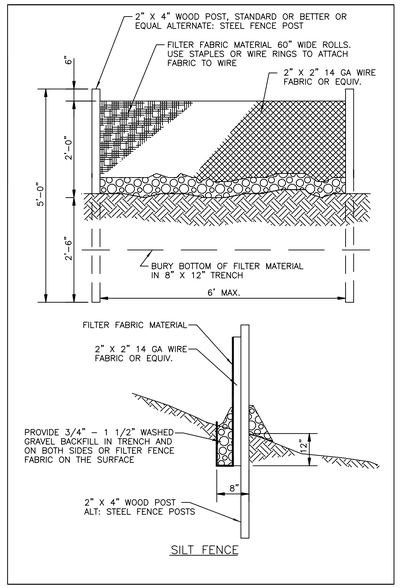

BMP-68

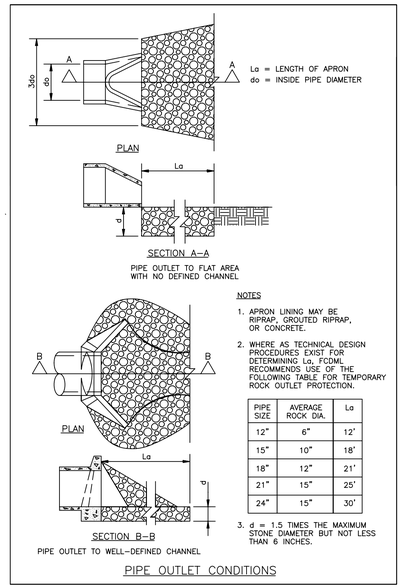

PIPE SIZE	AVERAGE ROCK DIA.	La
12"	6"	12'
15"	10"	18'
18"	12"	21'
21"	15"	25'
24"	15"	30'

BMP-53

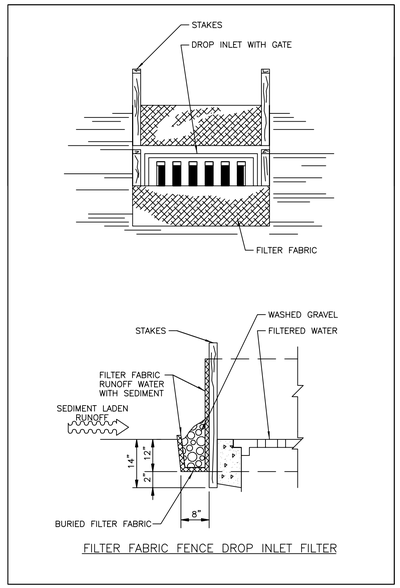

BMP-72

DEFINITION

A STABILIZED PAD OF AGGREGATE UNDERLAIN WITH FILTER CLOTH LOCATED AT ANY POINT WHERE TRAFFIC WILL BE ENTERING OR LEAVING A CONSTRUCTION SITE TO OR FROM A PUBLIC RIGHT-OF-WAY, STREET, ALLEY, SIDEWALK OR PARKING AREA.

PURPOSE

THE PURPOSE OF A STABILIZED CONSTRUCTION ENTRANCE IS TO REDUCE OR ELIMINATE THE TRACKING OF SEDIMENT ONTO PUBLIC RIGHTS-OF-WAY OR STREETS. REDUCING TRACKOUT OF SEDIMENTS AND OTHER POLLUTANTS ONTO PAVED ROADS HELPS PREVENT DEPOSITION OF SEDIMENTS INTO LOCAL STORM DRAINS AND PRODUCTION OF AIRBORNE DUST.

APPROPRIATE APPLICATIONS

A STABILIZED CONSTRUCTION ENTRANCE SHOULD BE USED AT ALL POINTS OF CONSTRUCTION INGRESS AND EGRESS. NPDES PERMITS REQUIRE THAT APPROPRIATE MEASURES BE IMPLEMENTED TO PREVENT TRACKOUT OF SEDIMENTS ONTO PAVED ROADWAYS.

LIMITATIONS

THE STABILIZED CONSTRUCTION ENTRANCE PLAN SHOULD BE REVIEWED AS PART OF THE PROJECT TRAFFIC CONTROL PLAN.

- CONSTRUCT ON LEVEL GROUND.
- STABILIZED CONSTRUCTION ENTRANCES ARE RATHER EXPENSIVE TO CONSTRUCT AND WHEN A WASH RACK IS INCLUDED, A SEDIMENT TRAP OF SOME KIND MUST ALSO BE PROVIDED TO COLLECT WASH WATER RUNOFF.

PLANNING CONSIDERATIONS

STABILIZED CONSTRUCTION ENTRANCES ARE NOT VERY EFFECTIVE IN REMOVING SEDIMENT FROM EQUIPMENT LEAVING A CONSTRUCTION SITE. EFFICIENCY IS GREATLY INCREASED, THOUGH WHEN A WASHING RACK IS INCLUDED AS PART OF A STABILIZED CONSTRUCTION ENTRANCE. BUILD ON LEVEL GROUND

+ ADVANTAGES:

- DOES REMOVE SOME SEDIMENT FROM EQUIPMENT AND SERVES TO CHANNEL CONSTRUCTION TRAFFIC IN AND OUT OF THE SITE.

DESIGN & SIZING CONSIDERATIONS

THE AGGREGATE FOR STABILIZED CONSTRUCTION ENTRANCE APRONS SHALL BE 1 TO 3 INCHES IN SIZE, WASHED, WELL-GRADED GRAVEL OR CRUSHED ROCK. THE APRON DIMENSIONS RECOMMENDED ARE 30 FT. X 50 FT. AND 6 INCHES DEEP.

- ENTRANCE MUST BE PROPERLY GRADED TO PREVENT RUNOFF FROM LEAVING THE CONSTRUCTION SITE.
- WHEN WASH AREAS ARE PROVIDED, WASHING SHALL BE DONE ON AN AREA STABILIZED WITH CRUSHED STONE WHICH DRAINS INTO A PROPERLY CONSTRUCTED SEDIMENT TRAP OR BASIN (POND).

MAINTENANCE REQUIREMENTS

- INSPECT MONTHLY AND AFTER EACH RAINFALL.
- REPLACE GRAVEL MAT WHEN SURFACE VOIDS ARE NO LONGER VISIBLE. PERIODIC TOP DRESSING WITH ADDITIONAL STONE WILL BE REQUIRED.
- ALL SEDIMENTS DEPOSITED ON PAVED ROADWAYS MUST BE REMOVED WITHIN 24 HOURS.
- REMOVE GRAVEL AND FILTER FABRIC UPON COMPLETION OF CONSTRUCTION.

DEFINITION

A TEMPORARY BARRIER OF STRAW BALES OR SIMILAR MATERIAL USED TO INTERCEPT SEDIMENT LADEN RUNOFF FROM SMALL DRAINAGE AREAS OF DISTURBED SOIL. PURPOSE THE PURPOSE OF A STRAW BALE DIKE IS TO REDUCE RUNOFF VELOCITY AND CAUSE POSITION OF THE TRANSPORTED SEDIMENT LOAD.

APPROPRIATE APPLICATIONS

THE STRAW BALE DIKE IS USED WHERE THERE ARE NO CONCENTRATIONS OF WATER IN A CHANNEL OR DRAINAGE WAY, AND WHERE EROSION WOULD OCCUR FROM SHEET FLOW. THESE BARRIERS ARE TYPICALLY CONSTRUCTED, BELOW DISTURBED AREAS SUBJECT TO SHEET FLOW OF RUNOFF TO INTERCEPT AND DETAIN SEDIMENT.

LIMITATIONS

- STRAW BALE DIKES ARE NOT TO BE USED FOR EXTENDED PERIODS OF TIME BECAUSE THEY TEND TO ROT AND FALL APART.
- SUITABLE ONLY FOR SHEET FLOW ON SLOPES OF 2% OR FLATTER.
- NOT APPROPRIATE FOR LARGE DRAINAGE AREAS, LIMIT TO ONE ACRE OR LESS.
- STRAW BALES LOSE THEIR EFFECTIVENESS RAPIDLY DUE TO ROTTING, THUS CONSTANT MAINTENANCE IS REQUIRED.
- NOT RECOMMENDED FOR CONCENTRATED FLOW, CHANNEL FLOW, AND LIVE STREAMS.
- BALE BINDINGS OF JUTE OR COTTON NOT RECOMMENDED.

PLANNING CONSIDERATIONS

WHEN INSTALLED AND MAINTAINED PROPERLY, STRAW BALE DIKES REMOVE APPROXIMATELY 67% OF THE SEDIMENT TRANSPORTED IN CONSTRUCTION SITE RUNOFF. THIS OPTIMUM EFFICIENCY CAN ONLY BE ACHIEVED THROUGH CAREFUL MAINTENANCE WITH SPECIAL ATTENTION TO REPLACING ROTTED OR BROKEN BALES. BARRIER SHOULD BE CONSTRUCTED ON A LEVEL CONTOUR TO PREVENT CONCENTRATION OF FLOW AGAINST A SMALL PORTION OF THE BARRIER.

DESIGN & SIZING CRITERIA

1. BALES SHALL BE PLACED ON THE CONTOUR AND IN A ROW WITH ENDS TIGHTLY ABUTTING THE ADJACENT BALES.
2. MAXIMIZE PENDING BY LOCATING BARRIER AWAY FROM THE TOE-OF-SLOPES. THIS ALSO PROVIDES ACCESS FOR MAINTENANCE.
3. EACH BALE SHALL BE EMBEDDED IN THE SOIL A MINIMUM OF FOUR INCHES AND PLACED SO THE BINDINGS ARE HORIZONTAL. BINDINGS PLACED ON SOIL WILL SOON DISINTEGRATE AND CAUSE THE BARRIER TO FAIL.
4. BALES SHALL BE SECURELY ANCHORED IN PLACE BY EITHER TWO STAKES OR RE-BARS DRIVEN THROUGH THE BALE. THE FIRST STAKE IN EACH BALE SHALL BE DRIVEN TOWARD THE PREVIOUSLY LAID BALE AT AN ANGLE TO FORCE THE BALES TOGETHER. STAKES SHALL BE DRIVEN FLUSH WITH THE BALE.
5. BALES SHALL BE REMOVED WHEN THEY HAVE SERVED THEIR USEFULNESS SO AS NOT TO BLOCK OR IMPEDE STORM FLOW OR DRAINAGE.

MAINTENANCE REQUIREMENTS

INSPECT MONTHLY AND AFTER EACH RAIN EVENT. REMOVE AND PROPERLY DISPOSE OF DETAINED SEDIMENTS WHEN SILT DEPTH REACHES 6".

SELECTION OF FABRIC TENSILE STRENGTH AND BURSTING STRENGTH CHARACTERISTICS SHALL BE SUPPORTED WITH WIRE MESH IN AND AS RECOMMENDED BY THE FABRIC MANUFACTURER. FILTER FABRIC MATERIAL SHALL CONTAIN ULTRAVIOLET RAY INHIBITORS AND STABILIZERS TO PROVIDE A MINIMUM OF SIX MONTHS OF EXPECTED USABLE LIFE AT A TEMPERATURE RANGE OF 0° F. TO 120° F.

- TYPICAL INSTALLATION:

FILTER FENCES ARE TO BE CONSTRUCTED ON A LEVEL CONTOUR TO MAXIMIZE THE AVAILABLE PONDING AREA AND PREVENT CONCENTRATION OF FLOW AGAINST THE FENCE.

a. POSTS SHALL BE SPACED A MAXIMUM OF 6 FEET APART AND DRIVEN SECURELY INTO THE GROUND A MINIMUM OF 30 INCHES.

b. A TRENCH SHALL BE EXCAVATED APPROXIMATELY 8 INCHES WIDE AND 12 INCHES DEEP ALONG THE LINE OF POSTS AND UPSLOPE FROM THE BARRIER.

c. WHEN STANDARD STRENGTH FILTER FABRIC IS USED, A WIRE MESH SUPPORT FENCE SHALL BE FASTENED SECURELY TO THE UPSLOPE SIDE OF THE POSTS USING HEAVY- DUTY WIRE STAPLES AT LEAST 1 INCH LONG, TIE WIRES OR HOG RINGS. THE WIRE SHALL EXTEND INTO THE TRENCH A MINIMUM OF 4 INCHES.

d. THE STANDARD STRENGTH FILTER FABRIC SHALL BE STAPLED OR WIRED TO THE FENCE, AND 20 INCHES OF THE FABRIC SHALL EXTEND INTO THE TRENCH. WHEN EXTRA-STRENGTH FILTER FABRIC AND CLOSER POST SPACING ARE USED, THE WIRE MESH SUPPORT FENCE MAY BE ELIMINATED AND THE FILTER FABRIC STAPLED OR WIRED DIRECTLY TO THE POSTS.

e. THE USE OF JOINTS SHOULD BE AVOIDED WHEN JOINTS ARE NECESSARY. FILTER CLOTH SHALL BE SPLICED TOGETHER ONLY AT A SUPPORT POST, WITH A MINIMUM 6 INCH OVERLAP AND BOTH. ENDS SECURELY FASTENED TO THE POST.

f. THE TRENCH SHALL BE BACKFILLED WITH 3/4-INCH MINIMUM DIAMETER WASHED GRAVEL OR COMPACTED- NATIVE MATERIAL.

MAINTENANCE REQUIREMENTS INSPECT MONTHLY DURING DRY PERIODS AND IMMEDIATELY AFTER EACH RAINFALL. REPAIR AS NECESSARY. SEDIMENT MUST BE REMOVED WHEN IT REACHES APPROXIMATELY ONE THIRD THE HEIGHT OF THE FENCE, ESPECIALLY IF HEAVY RAINS ARE EXPECTED. FILTER FENCES SHOULD NOT BE REMOVED UNTIL THE UPSLOPE AREA HAS BEEN PERMANENTLY STABILIZED

DEFINITION

A SECTION OF ROCK PROTECTION PLACED AT THE OUTLET END OF CULVERTS, CONDUITS OR CHANNELS. GROUTED RIPRAP AND CONCRETE RUBBLE ARE ALSO USED FOR PIPE OUTLET STABILIZATION.

PURPOSE

THE PURPOSE OF THE ROCK OUTLET PROTECTION IS TO REDUCE THE VELOCITY, AND ENERGY OF WATER, SUCH THAT THE FLOW WILL NOT ERODE THE RECEIVING DOWNSTREAM REACH.

APPROPRIATE APPLICATIONS

THIS PRACTICE APPLIES WHERE DISCHARGE VELOCITIES AND ENERGIES AT THE OUTLETS OF CULVERTS, CONDUITS OR CHANNELS ARE SUFFICIENT TO ERODE THE NEXT DOWNSTREAM REACH.

ROCK OUTLET PROTECTION IS USUALLY LESS EXPENSIVE AND EASIER TO INSTALL THAN CONCRETE APRONS OR ENERGY DISSIPATERS; IT ALSO SERVES TO TRAP SEDIMENT AND REDUCE FLOW VELOCITIES. ROCK SIZE SHOULD BE INCREASED FOR HIGH VELOCITY FLOWS.

LIMITATIONS

ROCK OUTLET PROTECTION MAY NEED CONTINUAL MAINTENANCE BECAUSE LARGE STORMS OFTEN WASH AWAY THE STONE AND LEAVE THE AREA SUSCEPTIBLE TO EROSION. GROUTED OR WIRE-TIED ROCK RIPRAP CAN MINIMIZE MAINTENANCE REQUIREMENTS.

PLANNING CONSIDERATIONS

ROCK OUTLET PROTECTION IS EFFECTIVE WHEN THE ROCK IS SIZED AND PLACED PROPERLY. WHEN THIS IS ACCOMPLISHED, ROCK OUTLETS DO MUCH TO LIMIT EROSION AT PIPE OUTLETS. IF RUNOFF IS SEDIMENT-LADEN, A SEDIMENT TRAP BELOW THE PIPE OUTLET IS RECOMMENDED.

PERMANENT ROCK RIPRAP PROTECTION SHOULD BE DESIGNED AND SIZED BY THE ENGINEER AS PART OF THE CULVERT, CONDUIT OR CHANNEL DESIGN.

DESIGN AND SIZING CRITERIA

GENERAL RECOMMENDATIONS FOR ROCK SIZE AND LENGTH OF OUTLET PROTECTION MAT SHOWN IN THE ROCK OUTLET PROTECTION FIGURE. BEST RESULTS ARE OBTAINED WHEN SOUND, DURABLE, ANGULAR ROCK IS USED.

MAINTENANCE

INSPECT MONTHLY AND AFTER EACH RAINFALL. REPLACE ROCKS AS NEEDED.

DEFINITION

A SEDIMENT FILTER OR AN EXCAVATED IMPOUNDING AREA AROUND A STORM DRAIN, DROP INLET, OR CURB INLET.

PURPOSE

TO PREVENT SEDIMENT FROM ENTERING STORM DRAINAGE SYSTEMS PRIOR TO PERMANENT STABILIZATION OF THE DISTURBED AREA.

APPROPRIATE APPLICATIONS

WHERE STORM DRAIN INLETS ARE TO BE MADE OPERATIONAL BEFORE PERMANENT STABILIZATION OF THE DISTURBED DRAINAGE AREA. DIFFERENT TYPES OF STRUCTURES ARE APPLICABLE TO DIFFERENT CONDITIONS:

A. FILTER FABRIC FENCE - APPLICABLE WHERE THE INLET DRAINS A RELATIVELY SMALL (LESS THAN 1 ACRE) FLAT AREA (LESS THAN 5 PERCENT SLOPE). DO NOT PLACE FABRIC UNDER GRATE AS THE COLLECTED SEDIMENT MAY FALL INTO THE DRAIN WHEN THE FABRIC IS RETRIEVED.

B. EXCAVATED DROP INLET SEDIMENT TRAP - PROTECTION AGAINST SEDIMENT ENTERING A STORM DRAIN INLET CAN BE PROVIDED BY EXCAVATING AN AREA IN THE APPROACH TO THE DRAIN. THE DRAINAGE AREA FOR A DRAIN PROTECTED IN THIS MANNER IS ONE ACRE. PROVIDE WEEP HOLES TO DRAIN THE SHALLOW POOL.

+ ADVANTAGES:

- INLET PROTECTION PREVENTS SEDIMENT FROM ENTERING THE STORM DRAIN SYSTEM AND CLOGGING IT.

LIMITATIONS

- PONDING WILL OCCUR AT THE INLET WITH POSSIBLE SHORT TERM FLOODING.
- CURB INLETS ON SLOPES CANNOT BE EFFECTIVELY PROTECTED BECAUSE THE STORMWATER WILL BYPASS THE INLET AND CONTINUE DOWNGRADE.
- FILTER FABRIC FENCES ARE LIMITED TO STORM DRAIN INLETS FOR SMALL DRAINAGE AREAS OF FIVE ACRE OR LESS. FOR LARGER DRAINAGE AREAS, SMALLER SEDIMENT CATCHMENT AREAS ARE RECOMMENDED.

PLANNING CONSIDERATIONS

WHERE STORM SEWERS ARE MADE OPERATIONAL BEFORE THEIR DRAINAGE AREA IS STABILIZED, OR WHERE CONSTRUCTION IS ADJACENT TO AN EXISTING STORM SEWER, LARGE AMOUNTS OF SEDIMENT MAY ENTER THE STORM SEWER SYSTEM. IN CASES OF EXTREME SEDIMENT LOADING, THE STORM SEWER ITSELF MAY CLOG AND LOSE A MAJOR PORTION OF ITS CAPACITY. TO AVOID THESE PROBLEMS, IT IS NECESSARY TO PREVENT SEDIMENT FROM ENTERING THE SYSTEM AT THE INLETS.

THIS PRACTICE CONTAINS SEVERAL TYPES OF INLET FILTERS AND TRAPS WHICH HAVE DIFFERENT APPLICATIONS DEPENDENT UPON SITE CONDITIONS AND TYPE OF INLET. OTHER INNOVATIVE TECHNIQUES FOR ACCOMPLISHING THE SAME PURPOSE ARE ENCOURAGED, BUT ONLY AFTER SPECIFIC PLANS AND DETAILS ARE SUBMITTED TO AND APPROVED BY THE LOCAL GOVERNMENT.

Two working days before you dig, CALL FOR THE BLUE STAKES 263-1100 800-782-5348 Blue Stake Center

DRAWING SCALED

(FIRM INFORMATION HERE)

DEVELOPER/OWNER NAME

PROJECT NAME NAME

PLAN TYPE Storm Water Management Plan

SEALED

ORIGINAL PLAN DATE

LATEST REVISION DATE

SHEET NUMBER 3 OF 5

PROJECT NUMBER XXXX

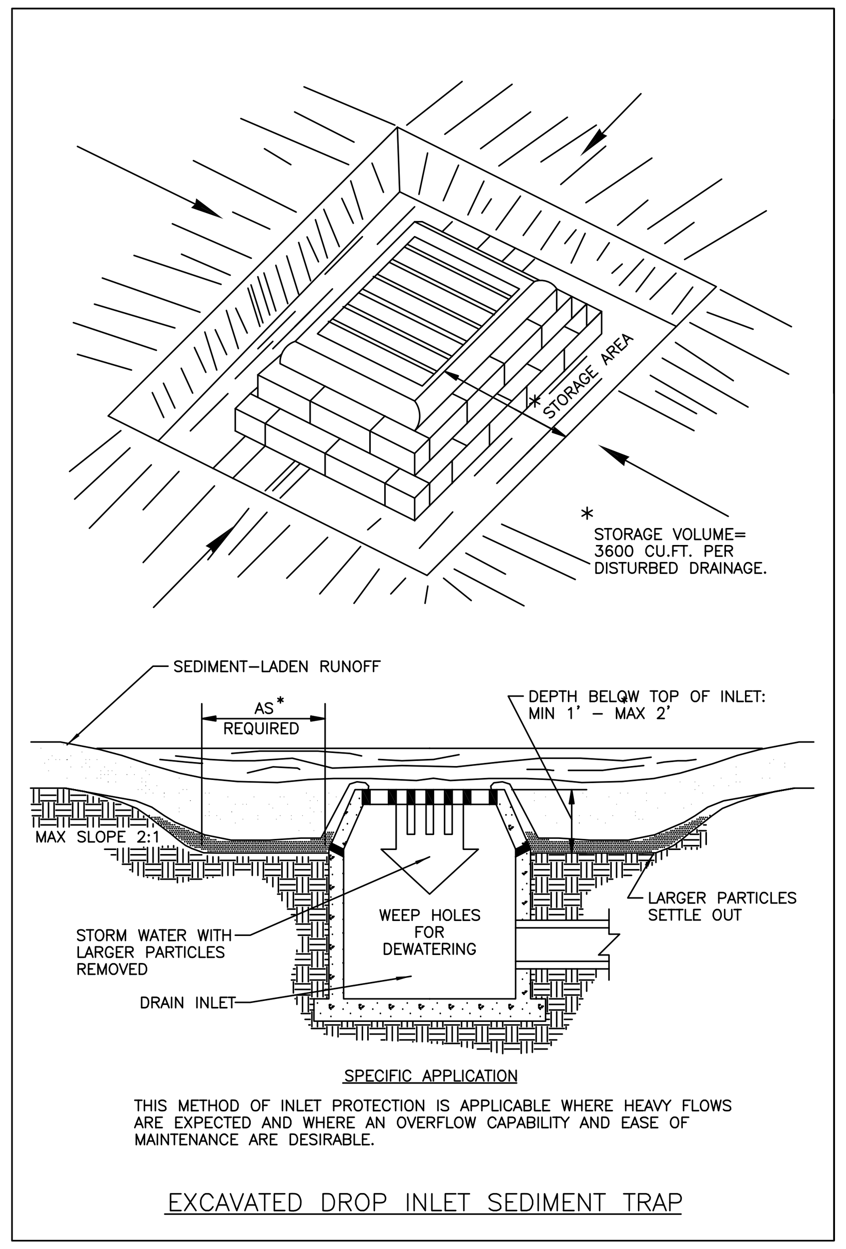

BMP-73

DESIGN & SIZING CRITERIA

GRATES AND SPACES OF ALL INLETS SHOULD BE SECURED TO PREVENT SEEPAGE OF SEDIMENT-LADEN WATER. ALL INLET PROTECTION MEASURES SHOULD INCLUDE SEDIMENT SUMPS OF 1 TO 2 FEET IN DEPTH AND WITH 2:L SIDE SLOPES. INSTALLATION PROCEDURE FOR FILTER FABRIC FENCE:

A. PLACE 2 INCH BY 2 INCH WOODEN STAKES AROUND THE PERIMETER OF THE INLET A MAXIMUM OF 3 FEET APART AND DRIVE THEM AT LEAST 8 INCHES INTO THE GROUND. THE STAKES MUST BE AT LEAST 3 FEET LONG.
B. EXCAVATE A TRENCH APPROXIMATELY 8 INCHES WIDE AND 12 INCHES DEEP AROUND THE OUTSIDE PERIMETER OF THE STAKES.
C. STAPLE THE FILTER FABRIC (FOR MATERIALS AND SPECIFICATIONS, SEE SILT FENCE BMP) TO WOODEN STAKES SO THAT 32 INCHES OF THE FABRIC EXTENDS OUT AND CAN BE FORMED INTO THE TRENCH. USE HEAVY-DUTY WIRE STAPLES AT LEAST M INCH IN LENGTH.
D. BACKFILL THE TRENCH WITH 3/4 INCH OR LESS WASHED GRAVEL ALL THE WAY AROUND.

MAINTENANCE REQUIREMENTS

FOR SYSTEMS USING FILTER FABRIC: INSPECTIONS SHOULD BE MADE ON A REGULAR BASIS, ESPECIALLY AFTER LARGE STORM EVENTS. IF THE FABRIC BECOMES CLOGGED, IT SHOULD BE REPLACED. SEDIMENT SHOULD BE REMOVED WHEN IT REACHES APPROXIMATELY ONE-HALF THE HEIGHT OF THE FENCE. IF A SUMP IS USED, SEDIMENT SHOULD BE REMOVED WHEN IT FILLS APPROXIMATELY ONE-HALF THE DEPTH OF THE HOLE.

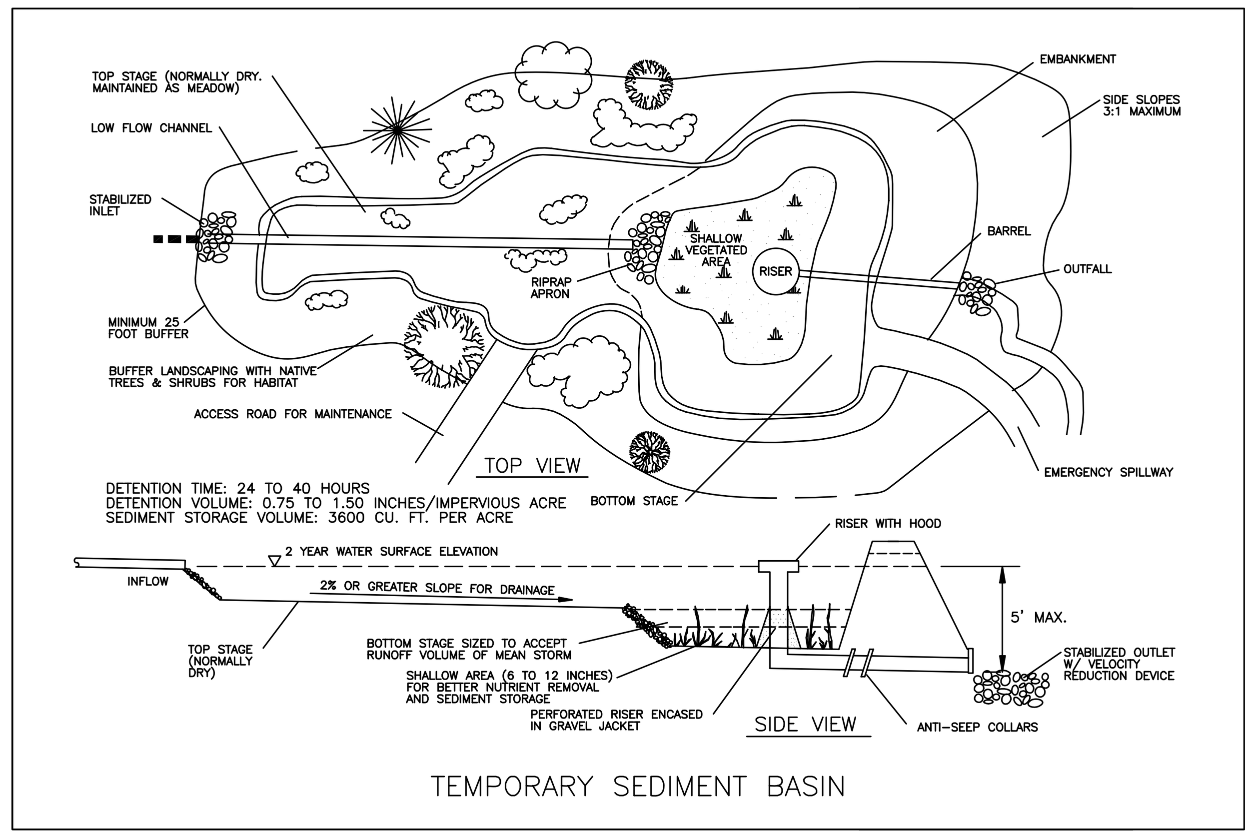

BMP-86

DEFINITION

A TEMPORARY BASIN WITH A CONTROLLED STORM WATER RELEASE STRUCTURE FORMED BY CONSTRUCTING AN EMBANKMENT OF COMPACTED SOIL ACROSS A DRAINAGEWAY, OR OTHER SUITABLE LOCATIONS.

PURPOSE

TO COLLECT AND STORE SEDIMENT FROM SITES CLEARED AND/OR GRADED DURING CONSTRUCTION OR FOR EXTENDED PERIODS OF TIME BEFORE REESTABLISHMENT OF PERMANENT VEGETATION AND/OR CONSTRUCTION OF STRUCTURES. IT IS INTENDED TO HELP PREVENT DAMAGING EROSION ON THE SITE WHICH RESULTS IN SILT-LADEN RUNOFF. THE BASIN IS A TEMPORARY MEASURE (WITH A DESIGN LIFE LESS THAN 1 YEAR) AND IS TO BE MAINTAINED UNTIL THE SITE AREA IS PERMANENTLY PROTECTED AGAINST EROSION OR A PERMANENT DETENTION BASIN IS CONSTRUCTED.

APPROPRIATE APPLICATIONS

SEDIMENTATION BASINS ARE SUITABLE FOR NEARLY ALL TYPES OF CONSTRUCTION PROJECTS. BASINS SHOULD BE LOCATED AT THE STORMWATER OUTLET FROM THE SITE. A TYPICAL APPLICATION WOULD INCLUDE TEMPORARY DIKES (BERMS) AND/OR CHANNEL TO DIVERT RUNOFF TO THE BASIN INLET.

MANY DEVELOPMENT PROJECTS IN MARICOPA COUNTY WILL BE REQUIRED BY LOCAL ORDINANCES TO PROVIDE A STORM WATER DETENTION BASIN WHICH MAY BE EASILY ADAPTED TO SERVICE AS A SEDIMENTATION POND.

LIMITATIONS

SEDIMENT BASINS AND PONDS MUST BE INSTALLED ONLY WITHIN THE PROPERTY LIMITS WHERE FAILURE OF THE STRUCTURE WOULD NOT RESULT IN LOSS OF LIFE, DAMAGE TO HOMES OR BUILDINGS, OR INTERRUPTION OF USE OR SERVICE OF PUBLIC ROADS OR UTILITIES. ALSO, SEDIMENT BASINS AND PONDS ARE ATTRACTIVE TO CHILDREN AND CAN BE VERY DANGEROUS. LOCAL ORDINANCES REGARDING HEALTH AND SAFETY MUST BE ADHERED TO. IF FENCING OF THE POND IS REQUIRED, THE TYPE OF FENCE AND ITS LOCATION SHALL BE SHOWN ON THE SWPPP.

- GENERALLY TEMPORARY SEDIMENTATION BASINS ARE FOR DISTURBED UPSTREAM DRAINAGE AREAS OF 10 ACRES OR MORE.
- BECAUSE OF ADDITIONAL &TENTION TIME, SEDIMENT PONDS MAY BE CAPABLE OF TRAPPING SMALLER SEDIMENT PARTICLES THAN TRAPS. HOWEVER, THEY ARE MOST EFFECTIVE WHEN USED IN CONJUNCTION WITH OTHER BMPS SUCH AS SEEDING OR MULCHING.
- PONDS MAY BECOME AN “ATTRACTIVE NUISANCE” AND CARE MUST BE TAKEN TO ADHERE TO ALL SAFETY PRACTICES.
- SEDIMENT PONDS ARE ONLY PRACTICA.LLY EFFECTIVE IN REMOVING SEDIMENT DOWN TO ABOUT THE MEDIUM SILT SIZE FRACTION. SEDIMENT-LADEN RUNOFF WITH SMALLER SIZE FRACTIONS (FINE SILT AND CLAY) WILL PASS THROUGH UNTREATED EMPHASIZING THE NEED TO CONTROL EROSION TO THE MAXIMUM EXTENT FIRST.

PLANNING CONSIDERATIONS

+ EFFECTIVENESS
- SEDIMENT BASINS ARE AT BEST ONLY 70-80 PERCENT EFFECTIVE IN TRAPPING SEDIMENT WHICH FLOWS INTO THEM. THEREFORE, THEY SHOULD BE USED IN CONJUNCTION WITH EROSION CONTROL PRACTICES SUCH AS TEMPORARY SEEDING, MULCHING, DIVERSION DIKES, ETC. TO REDUCE THE AMOUNT OF SEDIMENT FLOWING INTO THE BASIN.
- WHENEVER POSSIBLE, CONSTRUCT THE SEDIMENTATION BASINS BEFORE CLEARING AND GRADING WORK BEGINS.

+ LOCATION
- TO IMPROVE THE EFFECTIVENESS OF THE BASIN, IT SHOULD BE LOCATED SO AS TO INTERCEPT THE LARGEST POSSIBLE AMOUNT OF RUNOFF FROM THE DISTURBED AREA. THE BEST LOCATIONS ARE GENERALLY LOW AREAS BELOW DISTURBED AREAS. DRAINAGE INTO THE BASIN CAN BE IMPROVED BY THE USE OF DIVERSION DIKES AND DITCHES. THE BASIN MUST NOT BE LOCATED IN A STREAM BUT SHOULD BE LOCATED TO TRAP SEDIMENT-LADEN RUNOFF BEFORE IT ENTERS THE STREAM. THE BASIN SHOULD NOT BE LOCATED .WHERE ITS FAILURE WOULD RESULT IN THE LOSS OF LIFE OR INTERRUPTION OF THE USE OR SERVICE OF PUBLIC UTILITIES OR ROADS.

DESIGN & SIZING CRITERIA

THE SEDIMENT BASIN MAY BE FORMED BY PARTIAL EXCAVATION AND/OR BY CONSTRUCTION OF A COMPACTED EMBANKMENT. IT MAY HAVE ONE OR MORE INFLOW POINTS CARRYING POLLUTED RTMOFF. BAFFLES TO SPREAD THE FLOW THROUGHOUT THE BASIN SHOULD BE INCLUDED. A SECURELY ANCHORED RISER PIPE IS THE PRINCIPAL DISCHARGE MECHANISM ALONG WITH AN EMERGENCY OVERFLOW SPILLWAY. THE RISER PIPE SHAH BE SOLID WITH TWO L-INCH DIAMETER DEWATERING HOLES LOCATED AT THE TOP OF THE SEDIMENT STORAGE VOLUME ON OPPOSITE SIDES OF THE RISER PIPE AS SHOWN IN THE ATTACHED FIGURE. OUTLET PROTECTION IS PROVIDED TO REDUCE EROSION AT THE PIPE OUTLET.

- THE SEDIMENT POND VOLUME IS THE SUM OF THE SEDIMENT STORAGE (1 FOOT IN DEPTH) & A SETTLING VOLUME OF 2 TO 4 FEET IN DEPTH. TTHE TOTAL VOLUME IS 3,600 CUBIC FEET PER ACRE OF UPSTREAM DISTURBED SOIL FOR A SEDIMENT BASIN.

COMMUTING THE SETTLING ZONE VOLUME : THE SETTLING ZONE VOLUME MAY BE APPROXIMATED BY ASSUMING A 2 FOOT DEPTH ABOVE THE SEDIMENT STORAGE VOLUME AND EXTENDING THE 3:1 SIDE SLOPES AS NECESSARY, OR BY COMPUTING THE PRECISE VOLUME AS OUTLINED BELOW. THE MAXIMUM SETTLING ZONE DEPTH SHALL BE 4 FEET.

POND SURFACE AREA:

THE SETTLING ZONE VOLUME IS DETERMINED BY THE POND SURFACE AREA WHICH IS COMPUTED USING THE FOLLOWING EQUATION: (SA) = 1.2Q10/VSED

WHERE Q10, IS THE DESIGN INFLOW BASED ON THE PEAK DISCHARGE FROM A 10-YEAR, 24-HOUR DURATION DESIGN STORM EVENT FROM THE TRIBUTARY DRAINAGE AREA AS COMPUTED USING THE METHODS DESCRIBED IN FLOOD CONTROL DISTRICT OF MARICOPA COUNTY'S HYDROLOGIC DESIGN MANUAL. PROVIDE A MINIMUM OF 3600 CUBIC FEET TOTAL VOLUME PER ACRE OF DRAINAGE.

THE SETTLING VELOCITY OF THE DESIGN SOIL PARTICLE WHICH IS MEDIUM SILT (0.02 MM) HAS A SETTLING VELOCITY (VSED) OF 0.00096 FT/SEC. AS A RULE IT WILL NOT BE NECESSARY TO USE A PARTICLE SIZE OF LESS THAN 0.02 MM FOR A TEMPORARY SEDIMENT BASIN. NOTE THAT IN CHOOSING VSED OF 0.00096 FT/SEC THE SURFACE AREA EQUATES TO A SURFACE AREA (SA) OF 1250 SQ. FT. PER CFS OF INFLOW (REFERENCE 1).

SETTLING DEPTH (SD) SHOULD NOT BE LESS THAN 2 FEET AND IS ALSO GOVERNED BY THE SEDIMENT STORAGE VOLUME SURFACE AREA AND RELATIONSHIP TO THE BASIN LENGTH (L). THE BASIN LENGTH IS DEFINED AS THE AVERAGE DISTANCE FROM THE INLET TO THE OUTLET OF THE POND.

THE RATIO OF L/SD SHOULD BE LESS THAN 200.
THE SETTLING VOLUME IS THEREFORE THE SURFACE AREA (SA) TIMES (SD), REQUIRED SETTLING DEPTH.

TO COMPLETE THE DESIGN OF THE SEDIMENT POND :

TOTAL SEDIMENT POND VOLUME AND DIMENSION ARE DETERMINED AS OUTLINED BELOW:

A. THE DETAILS SHOWN IN THE ATTACHED FIGURE MAY BE USEFUL IN DESIGNING THE SEDIMENT POND.

B. DETERMINE POND GEOMETRY FOR THE SEDIMENT STORAGE VOLUME CALCULATED ABOVE USING 3 FEET IN DEPTH AND 3:1 SIDE SLOPES TOM THE BOTTOM OF THE BASIN. NOTE, THE BASIN BOTTOM IS LEVEL.

C. EXTEND THE POND SIDE SLOPES (AT 3:1 MAX.) AS NECESSARY TO OBTAIN THE SETTLING ZONE VOLUME AT 2 FOOT DEPTH MINIMUM OR AS DETERMINED ABOVE.

D. ADJUST THE GEOMETRY OF THE BASIN TO EFFECTIVELY COMBINE THE SETTLING ZONE VOLUME AND SEDIMENT STORAGE VOLUMES WHILE PRESERVING THE DEPTH AND SIDE SLOPE CRITERIA.

E. PROVIDE AN EMERGENCY SPIILWAY WITH A CREST ELEVATION 1 FOOT ABOVE THE TOP OF THE RISER PIPE.

F. PROVIDE BAFFLES TO PREVENT SHORT-CIRCUITING. A 6:1 ASPECT RATIO BETWEEN THE BASIN LENGTH AND WIDTH OF THE POND IS DESIRABLE.

MAINTENANCE REOUIREMENTS

INSPECTIONS SHOULD BE MADE REGULARLY, ESPECIALLY AFTER EACH STORM EVENT OF 0.5 INCHES OR MORE. SEDIMENT SHOULD BE REMOVED WHEN IT FILLS ONE HALF OF THE POND'S TOTAL SEDIMENT STORAGE AREA. THE EFFECTIVENESS OF A SEDIMENT POND IS BASED LESS ON ITS SIZE THAN ON REGULAR SEDIMENT REMOVAL.

COA BMP 106

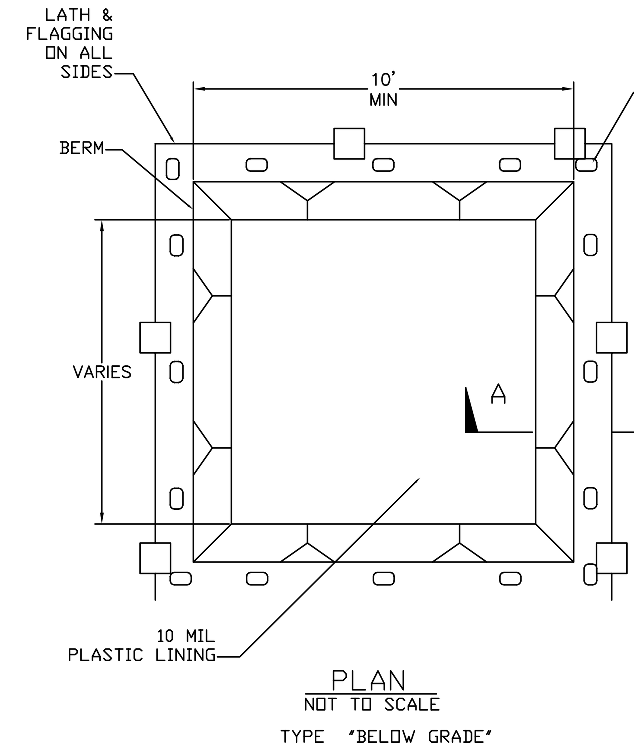

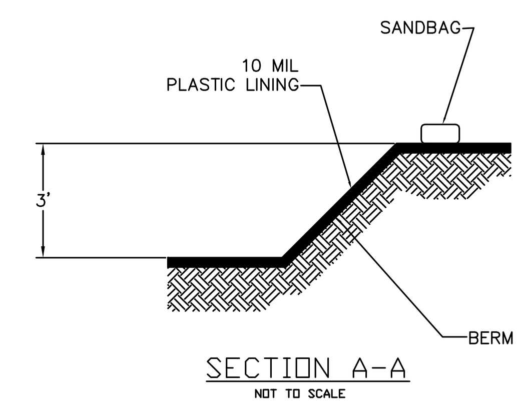

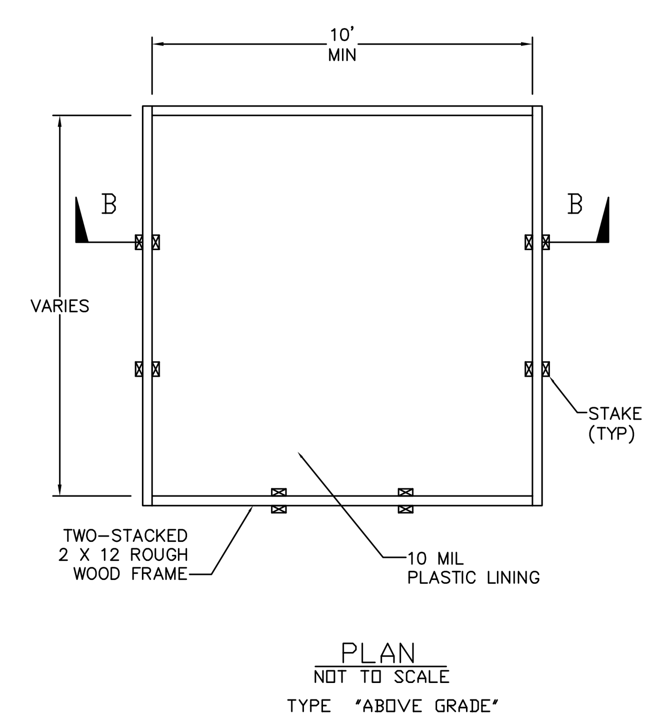

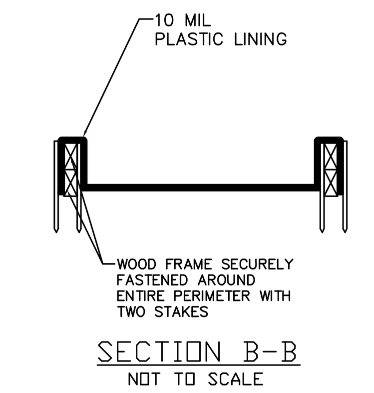

NOTES

1. ACTUAL LAYOUT DETERMINED IN FIELD
2. THE CONCRETE WASHOUT SIGN SHALL BE INSTALLED WITHIN 30 FT. OF THE TEMPORARY CONCRETE WASHOUT FACILITY.

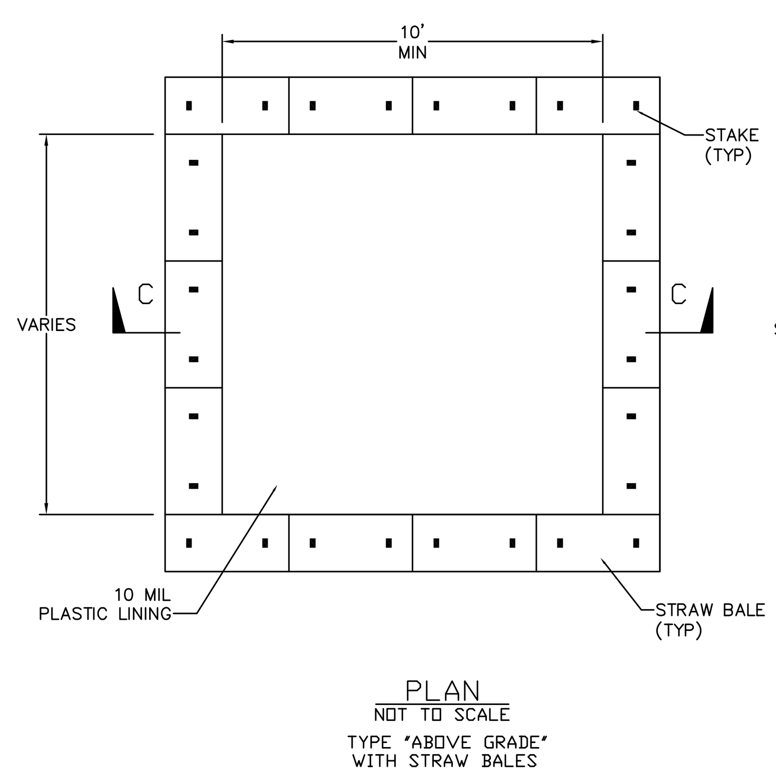

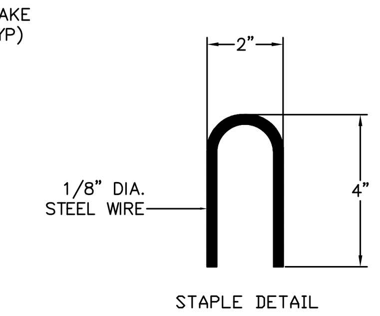

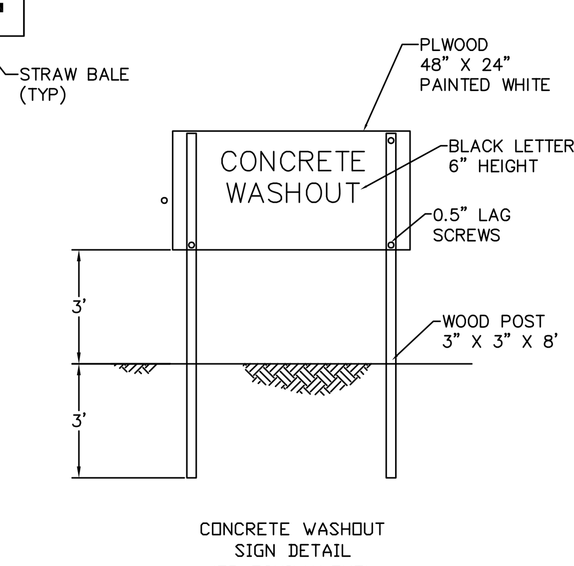

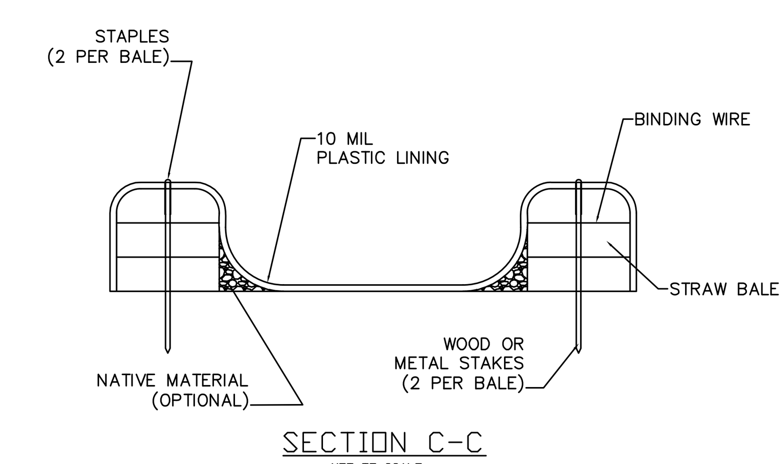

NOTES

1. ACTUAL LAYOUT DETERMINED IN FIELD
2. THE CONCRETE WASHOUT SIGN SHALL BE INSTALLED WITHIN 30 FT. OF THE TEMPORARY CONCRETE WASHOUT FACILITY.

DEFINITION

A temporary pit or bermed area for washout of concrete trucks, tools, mortar mixers, etc. The concrete wash-out area must be located as far as possible away from the watercourse and other drainage ways. Unless the entire project site is located within the floodplain, the concrete wash-out area must also be located above the floodplain. The washout area must be contained by constructing a temporary sub-surface pit or by using impervious structural barriers to contain concrete waste while it hardens. The wash-out area must be lined with an impervious material to hold wash water while it evaporates. The wash-out area must be built with adequate capacity to hold concrete wastes and potential rainfall, and prevent overtopping and runoff.

PURPOSE

Improper washout of concrete trucks, tools, etc. may allow fresh concrete or cement laden mortar to enter a storm drainage system.

APPROPRIATE APPLICATIONS

Concrete transit mixers must be cleaned in the designated wash-out area only. Effective when vehicles, tools, and mixers can be moved to the pit location. Where this is not practical, temporary ponds may be constructed to allow for settling and hardening of cement and aggregates. Washout area/pits are appropriate for minor amounts of wash water which result from cleaning of aggregate materials or concrete trucks, tools, etc.

PLANNING CONSIDERATIONS

1. Wash out into a slurry pit which will later be backfilled. Do this only with the approval of the property owner.
2. Wash out into a temporary pit where the concrete wash can harden, be broken up, and then properly disposed of off-site.

DESIGN & SIZING CRITERIA

1. Locate wash out pits away from storm drains, open ditches, or stormwater receiving waters.
2. DO NOT wash out concrete trucks into-storm drains, sanitary sewers, street gutters, or stormwater channels.
3. Washout cannot be connected to any storm water facilities, or retention basins.

MAINTENANCE REQUIREMENTS

Properly dispose of hardened concrete products on a routine basis to prevent the buildup of waste materials to an unmanageable size and to maintain percolation of water. All materials used to construct the temporary wash-out area must be removed from the construction site following construction. Ground disturbance at the wash-out area must be permanently stabilized at the end of construction.

Two working days before you dig,
CALL FOR THE BLUE STAKES
263-1100
800-782-5348
Blue Stake Center

DRAWING SCALE(S)

(FIRM INFORMATION HERE)

DEVELOPER/OWNER NAME
PROJECT NAME NAME
PLAN TYPE Storm Water Management Plan

SEALED

ORIGINAL PLAN DATE

LATEST REVISION DATE

SHEET NUMBER 4 OF 5

PROJECT NUMBER XXXX

Drawing Revisions	
Date	Comments

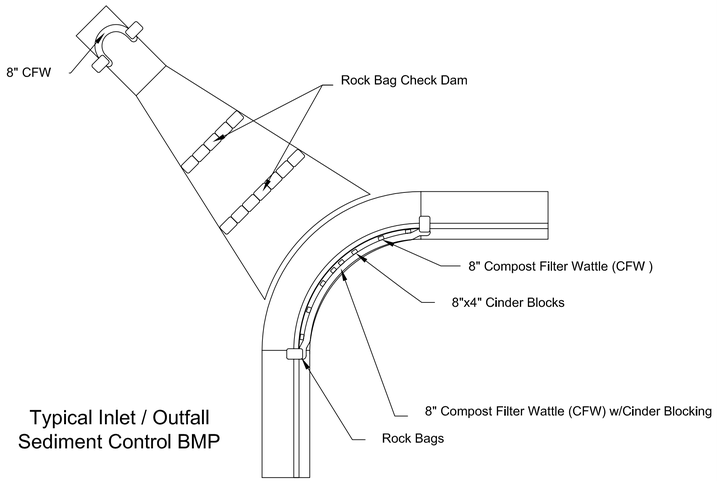

Typical Inlet / Outfall
Sediment Control BMP

COA BMP 100

Drawing Revisions	
Date	Comments

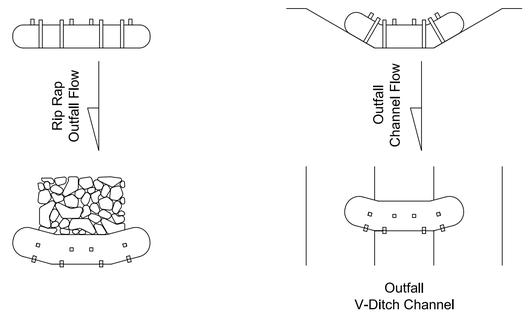

Notes:

1. Install 18" CFW for check dam installation.
2. Hay Bale Outfall BMP may be replaced using 18" CFW.
3. Place CFW as close as possible to rip rap or velocity dissipation structure.

COA BMP 101

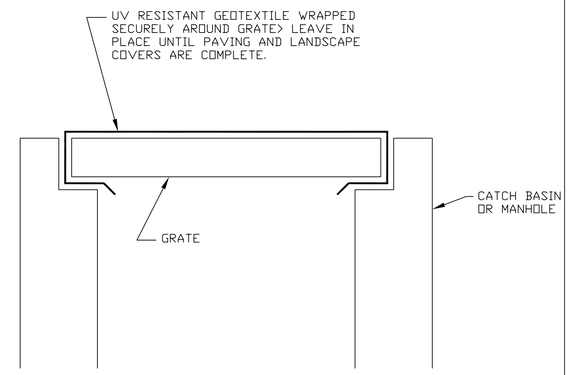

FABRIC GRATE COVER

COA BMP 102

Drawing Revisions	
Date	Comments
6/22/06	Added Drawing #FFS-2 BMP Notes

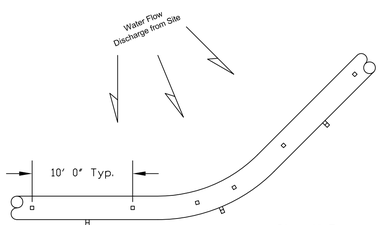

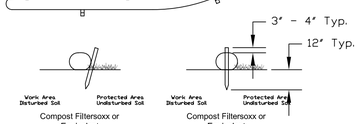

Compost Filtersoxx or Equivalent Optional Slope Staking

Compost Filtersoxx or Equivalent Standard Staking

Notes:

1. Use Filtrexx Filtersoxx or equivalent with compost that is weed free and derived from well decomposted source of organic material. The compost shall be produced using an aerobic composting process meeting CFR 503 regulations, including time and temperature data indicating effective weed seed, pathogen and insect larvae kill. The compost shall be free of any refuse, contaminants or other materials toxic to plant growth. Test methods shall follow USCC TMECC guidelines for laboratories procedures:
   - 1.1. PH - 5.0 to 8.0 in accordance with TMECC 04.11-A, *"Electrometric pH Determinations for Compost"*.
   - 1.2. Particle size - 99% passing a 2" sieve and a minimum of 60% greater than the 3/8" sieve, in accordance with TMECC 02.02-B, *"Sample Sieving for Aggregate Size Classification"*.
   - 1.3. Moisture content of less than 60% in accordance with standardized test methods for moisture determination.
   - 1.4. Material shall be relatively free (<1% by dry weight) of inert or foreign man made materials.
   - 1.5. Compost product shall be an approved as determined by testing procedures. A copy of an approved report shall be kept on file.
2. Use 2" x 2" wood stakes to secure CFW to grade spaced at 10' 0" intervals for most installations. Where installed on slopes stake spacing may be reduced and the optional slope staking may be used to secure Filtersoxx in place.
3. CFW may be used in direct flow areas within runoff channels, typically 18" or 24" diameter is used in channel applications.

Conditions of Use: Compost Filter Wattles (CFW) are to be used in any area requiring sediment or erosion control where runoff is in the form of sheet flow or in areas where silt fence is normally considered acceptable. The use of CFS or perimeter protection applies to areas of high sheet erosion, on steep slopes up to and exceeding 2:1, around inlets, outfalls and in other disturbed areas of construction sites requiring sediment control.

Maintenance: CFW should be inspected daily to make sure they hold their shape and are producing adequate permeable flow. If ponding becomes excessive, and sediment reaches more than 50% of the height of the CFW; either additional CFW should be added to the top of the existing CFW or the sediment on the upside portion of the CFW should be removed to the original grade. When construction is complete, the CFW may be cut open and the Filter Media dispersed with a loader, rake, skid steer or other device to be incorporated in the soil or left on top of the soil for final seeding to occur. The CFW mesh netting material will be collected and disposed of in normal trash container or removed by the Contractor.

Inspections: CFS should be inspected during the normal course of SWPPP inspection as outlined in the General Construction Permit. Inspectors should note any UV degradation of the CFW mesh and any tears which would provide a channel for to water flow through the FilterMedia. The CFW should be relatively uniform in appearance with even distribution of the Filter Media inside the mesh. Excessive stretching or pulling which reduces the outside diameter of the CFW by more than 30% should not be allowed. Staking should be spaced sufficiently to keep the CFW in place without significant movement when flows are present.

Construction (Installation): CFW shall be placed at locations indicated on the plans as directed by the Engineer. CFW should be installed parallel to the base of the slope or other affected area, perpendicular to the water flow. CFW may be used in direct flow situations within runoff channels or washes. Normally when used in channels or washes, 18" or 20" CFW will be used. Normally CFW does not need to be trenched, the mesh tube allows the CFW to deform and make intimate contact with the soil. Thus providing sufficient contact with the grade to prevent localized channel flow or under cutting of the BMP.

COA BMP 103

Drawing Revisions	
Date	Comments

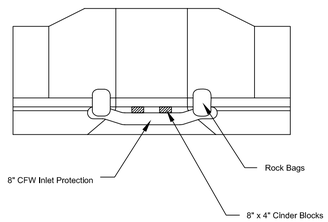

Sidewalk / Street Scupper
8" CFW Inlet BMP

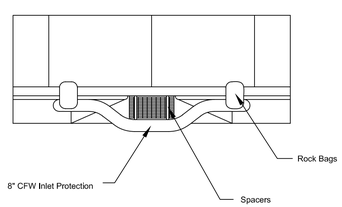

Sidewalk / Street Catch Basin & Grate
8" Wattles BMP

Notes:

1. Inlet protection shall consist of wattle such as Filtrexx SiltSoxx or equivalent with compost that is weed free and derived from well decomposted source of organic material. The compost shall be produced using an aerobic composting process meeting CFR 503 regulations, including time and temperature data indicating effective weed seed, pathogen and insect larvae kill. The compost shall be free of any refuse, contaminants or other materials toxic to plant growth. Test methods shall follow USCC TMECC guidelines for laboratories procedures:
   - 1.1. PH - 5.0 to 8.0 in accordance with TMECC 04.11-A, *"Electrometric pH Determinations for Compost"*.
   - 1.2. Particle size - 99% passing a 2" sieve and a minimum of 60% greater than the 3/8" sieve, in accordance with TMECC 02.02-B, *"Sample Sieving for Aggregate Size Classification"*.
   - 1.3. Moisture content of less than 60% in accordance with standardized test methods for moisture determination.
   - 1.4. Material shall be relatively free (<1% by dry weight) of inert or foreign man made materials.
   - 1.5. Compost product shall be an approved as determined by testing procedures. A copy of an approved report shall be kept on file.
2. Use of 8" x 4" cinder blocks should be spaced to support CFW away from inlet, as not to block an overflow situation.
3. Use of rock bags as anchoring devices instead of steel stakes shall be acceptable to preserve the curbing, street asphalt, concrete sidewalk, or other structures.
4. During Monsoons replaces approximately every 4 to 8 weeks. Otherwise replace approximately every 4 to 6 months.

COA BMP 104

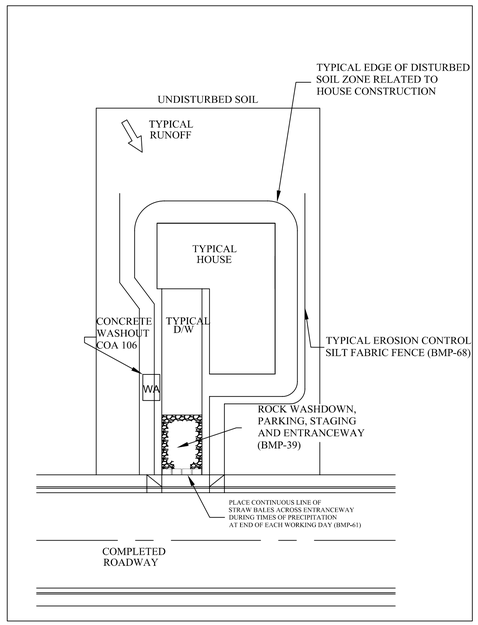

NOTES:

1. DEPENDING UPON CONTRACTORS' PRACTICES, THESE MEASURES MAY BE VARIED WITH APPROVAL FROM THE ENGINEER AND CITY'S NPDES COORDINATOR.
2. CONTRACTOR SHALL BE REQUIRED TO CONFORM TO ALL GENERAL EROSION CONTROL NOTES AND DETAILS.
3. DOWNSPOUTS SHALL NOT DRAIN TO THE ROADWAY RIGHT-OF-WAY OR INTO ANY DRAINAGE STRUCTURES IN THE RIGHT-OF-WAY.

COA BMP 105

Two working days before you dig, CALL FOR THE BLUE STAKES 263-1100 800-782-5348 Blue Stake Center

DRAWING SCALED

(FIRM INFORMATION HERE)

DEVELOPER/OWNER: NAME

PROJECT NAME: NAME

PLAN TYPE: Storm Water Management Plan

SEALED

ORIGINAL PLAN DATE

LATEST REVISION DATE

SHEET NUMBER 5 OF 5

PROJECT NUMBER XXXX